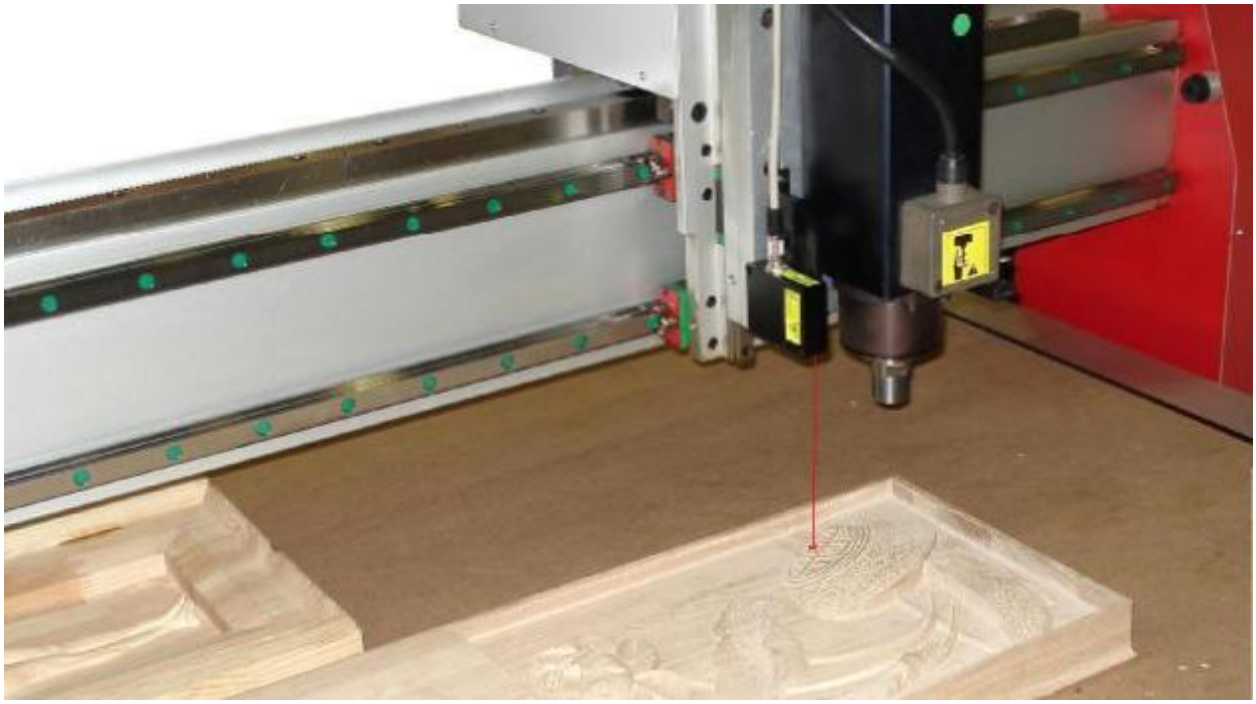

# 3D Laser Scanning System
# LaserProbe 4500

**User's manual**.

**Hylewicz CNC-Technik**
Siemensstrasse 13-15
D-47608 Geldern

Fon.: +49 (0) 2831 1344720
E-Mail: info@cnc-step.com
Website: www.cnc-step.de

2

# Contents

3

# 1. Safety precautions and measurement conditions

In connection/disconnection of cables, the sensor power must be switched off.
Do not use the system in locations close to powerful light sources.
To obtain stable results, wait about 20 minutes after sensor activation to achieve uniform sensor warm-up
Avoid metal chips getting into the optical isolation unit.

## 1.1. Notational conventions used in the document

**"Attention" symbol:** Pay attention to the warning to avoid typical mistakes when working with the 3D system.

**"Information" symbol:** Information that can be useful.

# 2. Electromagnetic compatibility

The system has been developed for use in industry and meets the requirements of the following standards:

EN 55022:2006 Information Technology Equipment. Radio disturbance characteristics. Limits and methods of measurement.
EN 61000-6-2:2005 Electromagnetic compatibility (EMC). Generic standards. Immunity for industrial environments.
EN 61326-1:2006 Electrical Equipment for Measurement, Control, and Laboratory Use. EMC Requirements. General requirements.

# 3. Laser safety

The profilometer make use of an c.w. 660 nm wavelength semiconductor laser. Maximum output power is 1 mW. The device belongs to the 2 laser safety class. The following warning label is placed on the profilometer body:

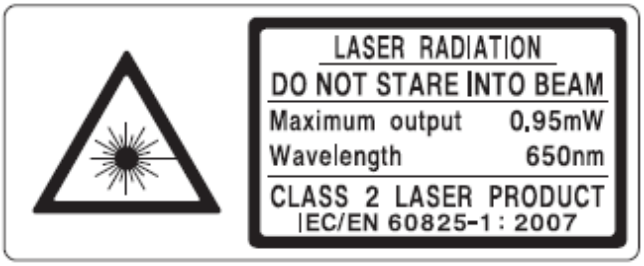


The following safety measures should be taken while operating the profilometer:

Do not target laser beam to humans;
Do not disassemble the sensor;
Avoid staring into the laser beam.

4

# 4. General information

The “LaserProbe 4500” system is intended for non-contact laser scanning of items for the purpose of obtaining three-dimensional computer model and formation of model files suitable for subsequent use in CNC system. The system is designed for mounting onto working machines with any type of control.

# 5. Complete set to be supplied

| Name | Qty | RF071-D0-O0 | RF071-D0-O1 | RF071-D1-O0 | RF071-D1-O1 |
|---|---|---|---|---|---|
| Triangulation laser sensor | 1 | ● | ● | x | x |
| Binocular triangulation laser sensor | 1 | x | x | ● | ● |
| Bracket for mounting sensor on machine | 1 | ● | ● | ● | ● |
| Synchronization unit with USB-cable for connection to PC | 1 | ● | ● | x | x |
| Net Switch/Hub | 1 | x | x | ● | ● |
| Cable for the synchronization unit | 1 | | | | |
| Power source | 1 | ● | ● | ● | ● |
| Screw M3x18 | 2 | ● | ● | ● | ● |
| Optical isolation unite | 1 | x | ● | x | ● |
| Cable for the optical isolation unit | 1 | x | ● | x | ● |
| Compact disc with drivers, software and operation manual | 1 | ● | ● | ● | ● |
| Passport for the Series RF603 laser sensor | 1 | ● | ● | ● | ● |
| Packing list | 1 | ● | ● | ● | ● |

● – standard set; x – not included in delivery set. An example of order see in p. 12

# 6. Basic technical data and characteristics.

## 6.1. Scanning parameters.

| Name | Value |
|---|---|
| Materials to be scanned | any materials* |
| Scanning grid for XY | arbitrary |
| Scanning field for XY | arbitrary |
| Scanning depth, mm | 100 or customized** |
| Average scanning speed, points/s | 4500 |

*when scanning transparent and reflective materials, special spray for laser scanning should be applied on the surface

**scanning depth is determined by working range of laser sensor (see par. 6.4.). It is possible to equip the system with a sensor having a different working range.

## 6.2. Allowable synchronization methods

| Source of synchronization signal | Signal level value |
|---|---|
| Signals for direct stepper control along X-axis | CMOS/TTL |
| Encoder on X-axis with impulses output (differential or non-differential) | 1...30V |
| Encoder on X-axis with sinusoidal output (differential or non-differential) | 1…30V |

5

## 6.3. Dynamic parameters of STEP input signal

| Shape | Parameter | Symbol | Condition | Min | Norm | Max |
|---|---|---|---|---|---|---|
| 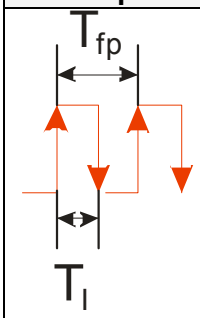  | Period of STEP signal, us | Tfp | Tsur=25°C | 125 | 222 | - |
| | Time of the active level of STEPsig-nal, us | Ti | Tsur=25°C | 10 | 25 | - |

**ATTENTION!**
In case of using **Mach3** and similar programs, be careful in adjusting STEP pulse duration, it must be shorter than the time Ti indicated in the table.

## 6.4. Laser sensors RF603 and RF603B

| Name | Value |
|---|---|
| Base distance, mm<br>Range, mm<br>Total height from the machine table, mm<br>Error, mm<br>Resolution, mm | 140*<br>100*<br>240*<br>±0,1*<br>0,03* |
| Maximum operation speed, points/s | 9400 |
| Laser type | <1 mW, wavelength 660 nm |
| Class of protection | IP67 |
| Working temperature, ºC | -10…+60 |
| Time of continuous operation | unlimited |
| Overall and mounting dimensions, mm | RF603 - Fig.3, RF603B-Fig.4 |
| Weight, g | RF603 – 100, RF603B -220 |

*it is possible to equip the system with laser sensor having a different working range and base distance.

**Information!**
The error and resolution of laser sensors is directly proportional to the sensor working range, therefore, to obtain maximum accuracy of scanning select the sensor with a working range comparable with the height of items to be scanned.

**Information!**
The use of an RF603B binocular sensor makes it possible to substantially improve scanning quality especially for items with deep relief. In contrast to standard sensor, the binocular sensor has two input windows symmetrically located relative to laser beam which guarantees scanning of regions not accessible for standard device, see Figs. 1,2. Examples of scanning are given in par. 17.1.

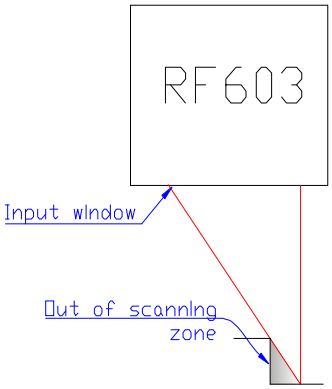


Figure 1

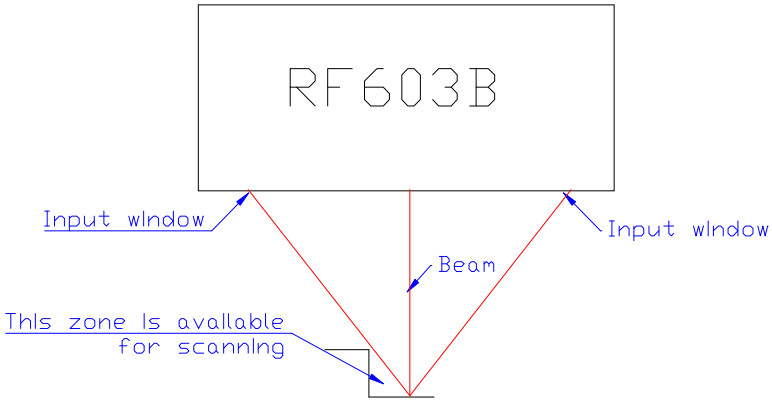


Figure 2

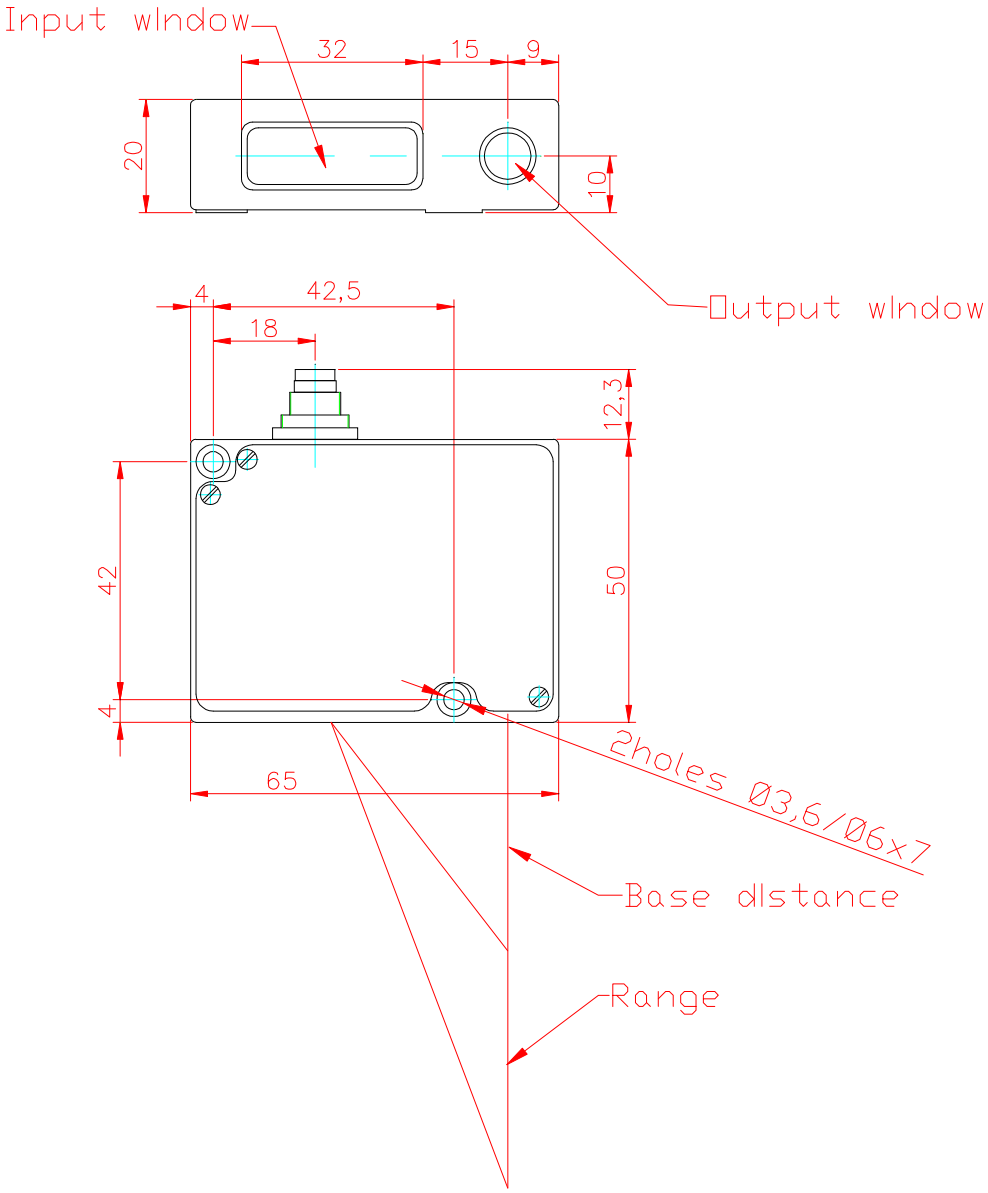


Figure 3

7

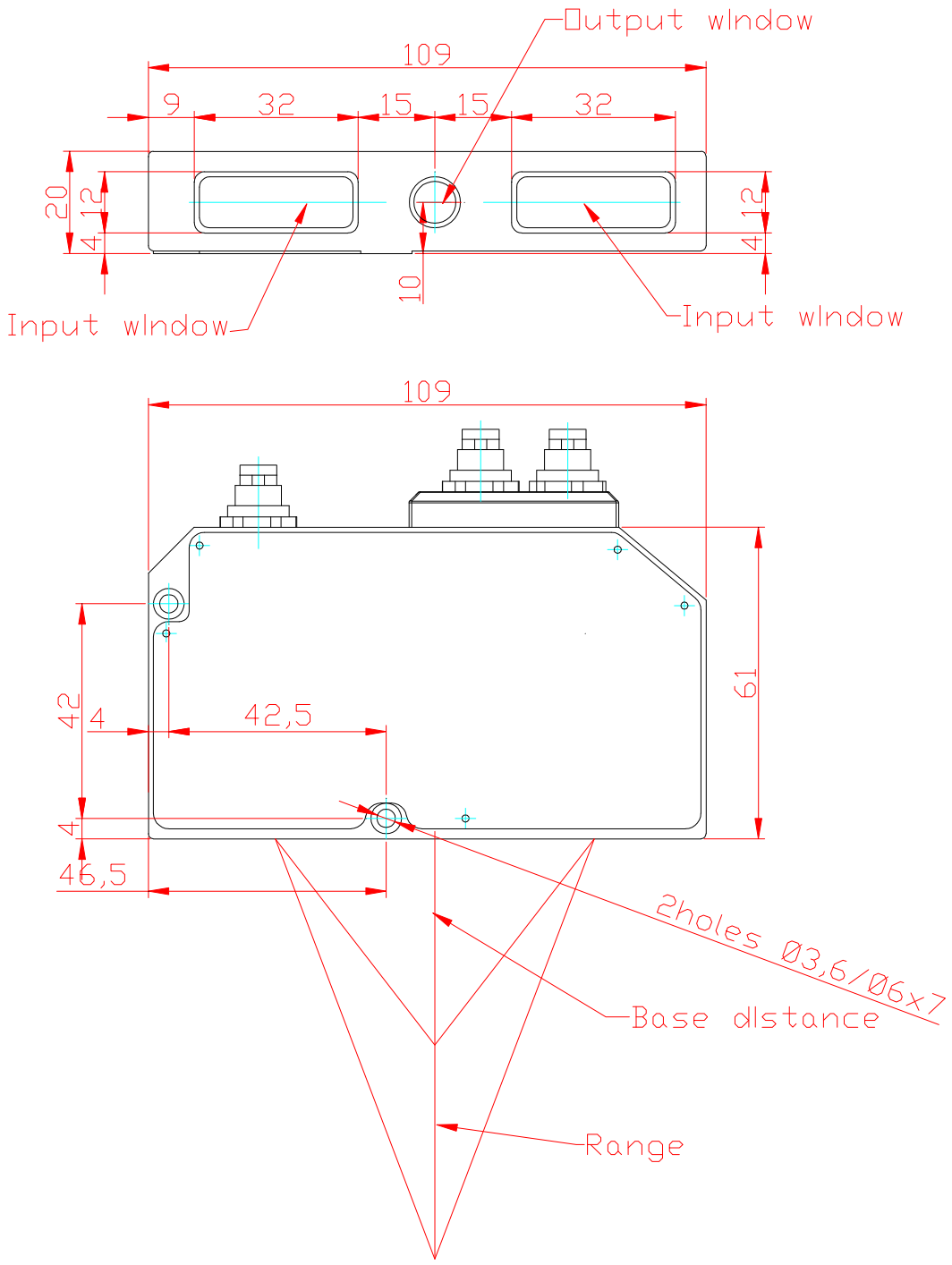


**Figure 4**

## 6.5. Synchronization unite

| Name | Value |
|---|---|
| PC communication interface | USB 2.0 |
| Class of protection | IP67 |
| Working temperature, ºC | -10…+60 |
| Dimensions, mm | Fig.5 |

8

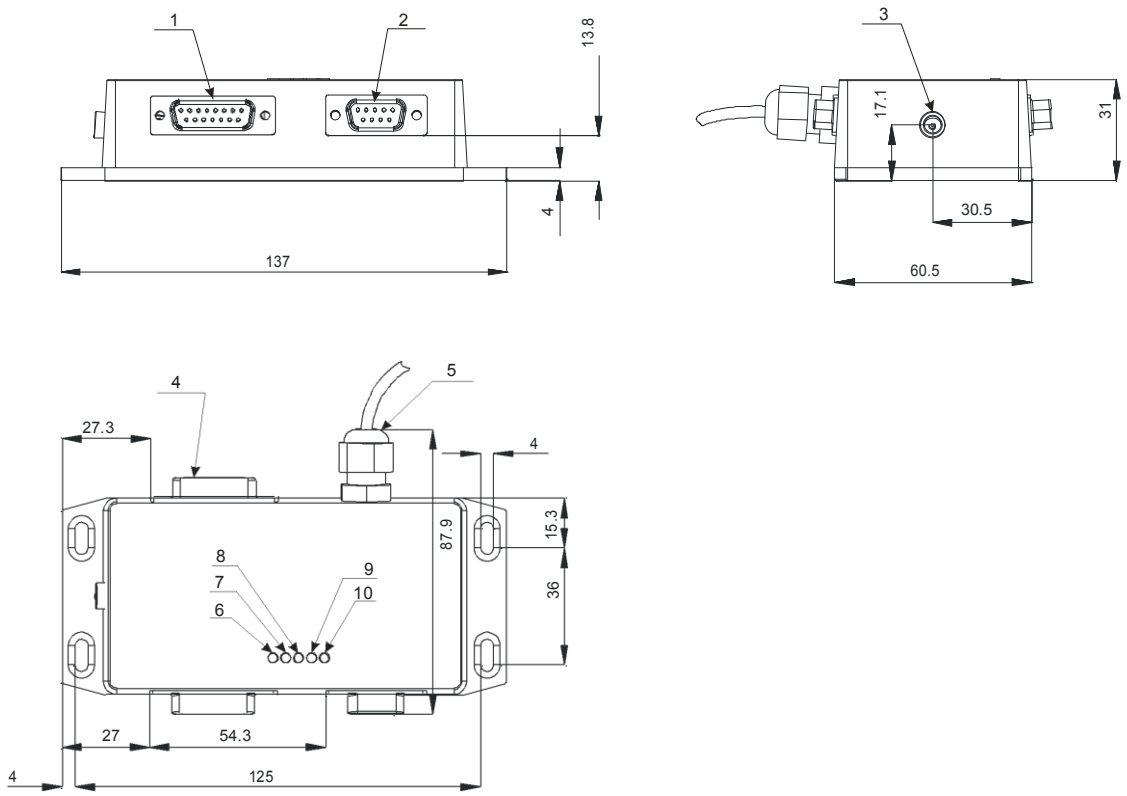


**Figure 5**

### 6.5.1. Contacts and LED designations of synchronization unit

| # | Designation | |
|---|---|---|
| 1 | Connector for machine, in case of mounting on Beaver 9A/12A/12AV/18A/24A/26A machines, not used otherwise; | |
| 2 | Connector for laser sensor; | |
| 3 | Power connector +5V; | |
| 4 | Connector for optical isolation unit (for mounting on Beaver 9A/12A/12AV/18A/24A/26A machines – 15-conductor cable to PC);; | |
| 5 | USB-cable for connection of the system to PC. | |
| 6 | Service LEDs | Availability of +5V power supply |
| 7 | | Availability of +15V power supply |
| 8 | | Activity of RX line of RS485 interface |
| 9 | | Status of STEP line |
| 10 | | Status of DIR line |

**ATTENTION!**
Sensor and synchronization unit must be connected to ground! (To the common machine ground)

## 6.6. Optical isolation unit

| Name | Value |
|---|---|
| Class of protection | IP64 |
| Working temperature, ºC | -10…+60 |
| Dimensions, mm | Fig. 6 |
| Mounting | on DIN-rail |

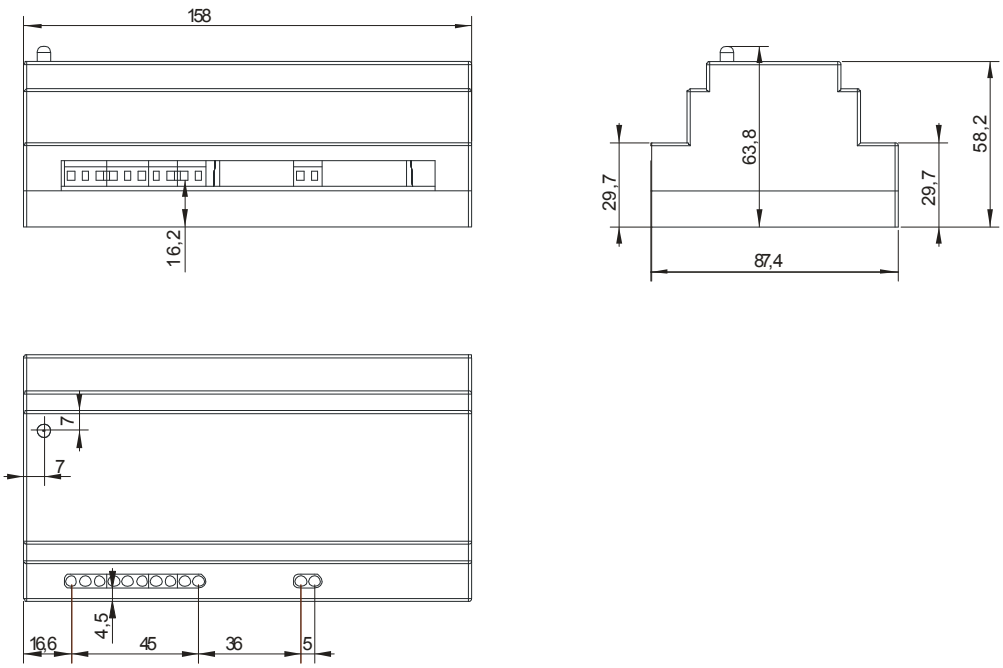


**Figure 6**

## 6.6.1. Designation of contacts

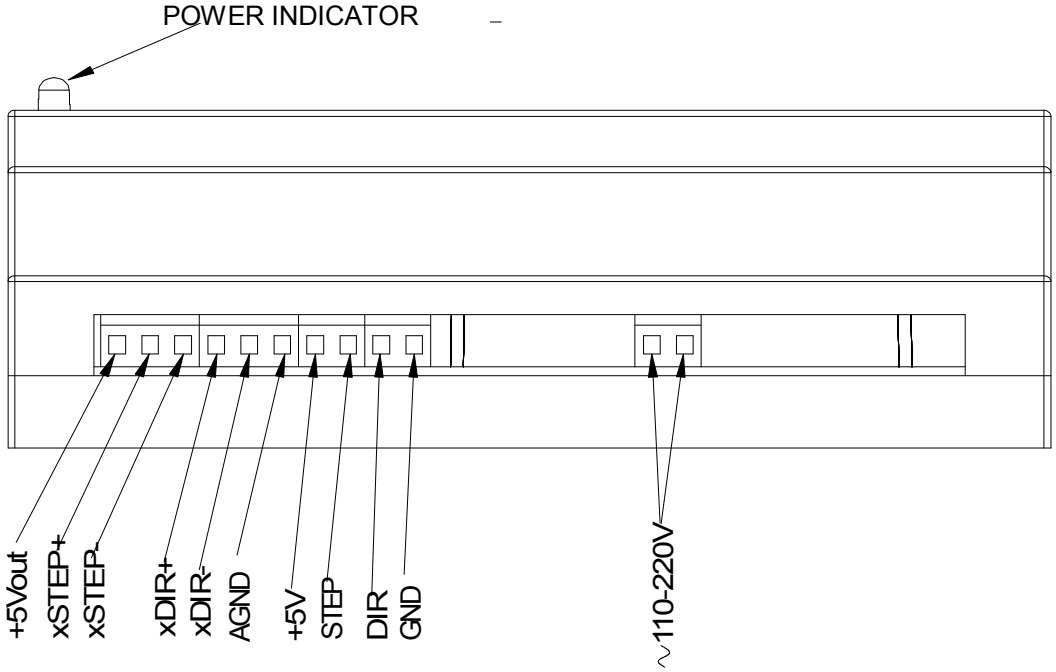


**Figure 7**

| Contact name | Type | Designation |
|---|---|---|
| +5Vout | Input | Not used |
| xSTEP+ | Input | Adjusted positive input of steps, or A+ signal of encoder |
| xSTEP- | Input | Adjusted negative input of steps, or A- signal of encoder |
| xDIR+ | Input | Adjusted positive input of steps, or B+ signal of encoder |
| xDIR- | Input | Adjusted negative input of steps, or B- signal of encoder |
| AGND | Input | Earth relative to which xSTEP+/- xDIR+/- inputs work |
| +5V | Output | Power of the input part of the synchronization unit |
| STEP | Output | Step signal for the synchronization unit |
| DIR | Output | Direction signal for the synchronization unit |
| GND | Output | Earth for the synchronization unit |

# 7. Operational principle

The laser sensor is mounted onto the machine movement system. In the scanning mode, the machine CNC system moves the sensor line-by-line over the item prototype. The sensor measures the distance (Z coordinate) to the item surface. Data takeoff from the sensor is synchronized with the sensor movement (XY coordinates), and the result is communicated to the PC through the USB-port for RF603 sensor or through the Ethernet-port for RF603B sensor. Thus, XYZ coordinate array for the surface is formed, i.e. a digital prototype model is created which is saved as a point cloud file as well as in a common STL format suitable for subsequent use in CNC.

# 8. Connection versions

## 8.1. Standard sensor connection

### 8.1.1. Connection to machines with direct stepper control

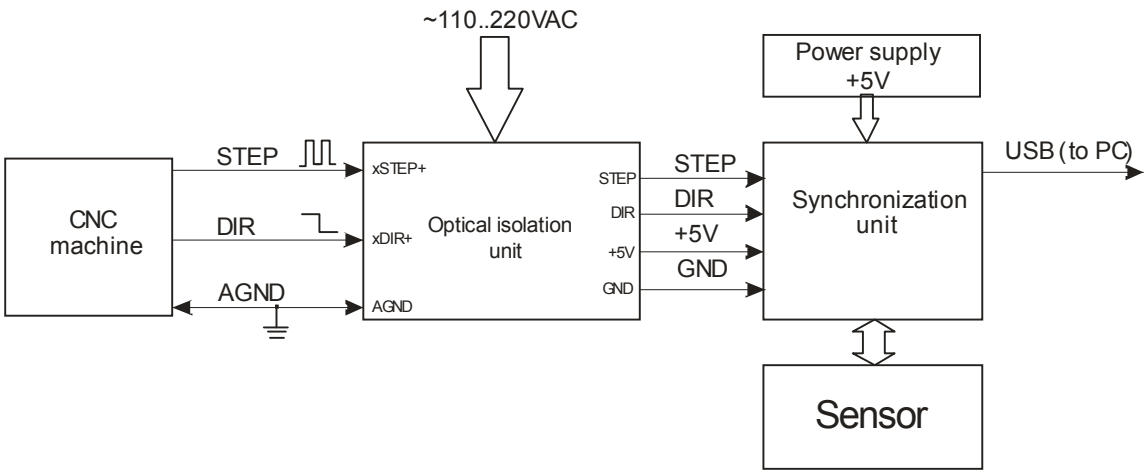


### 8.1.2. Connection to Beaver 9A/12A/12AV/18A/24A/26A machines

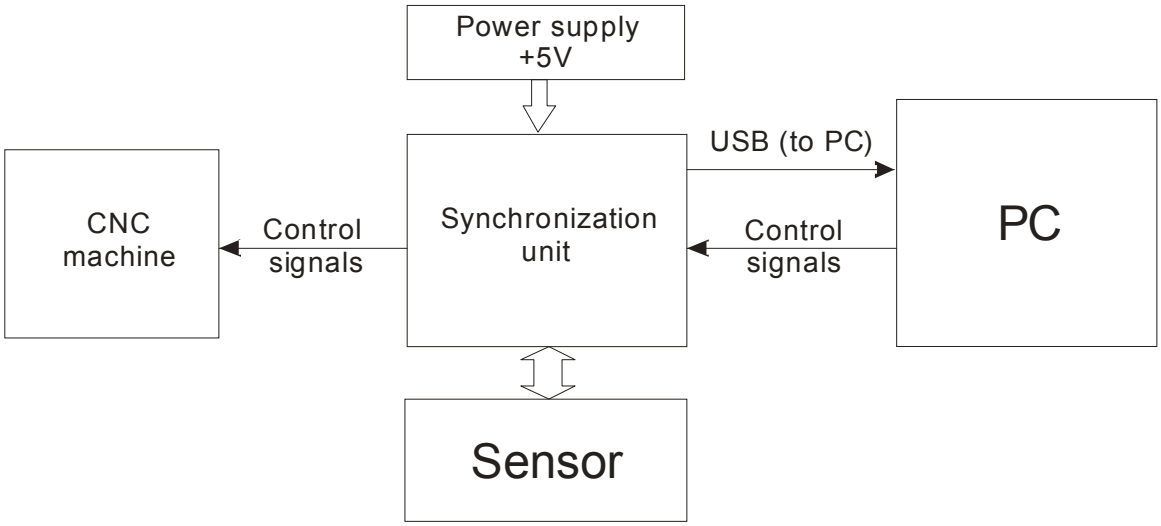

### 8.1.3. Connection to machines with encoder impulse signals

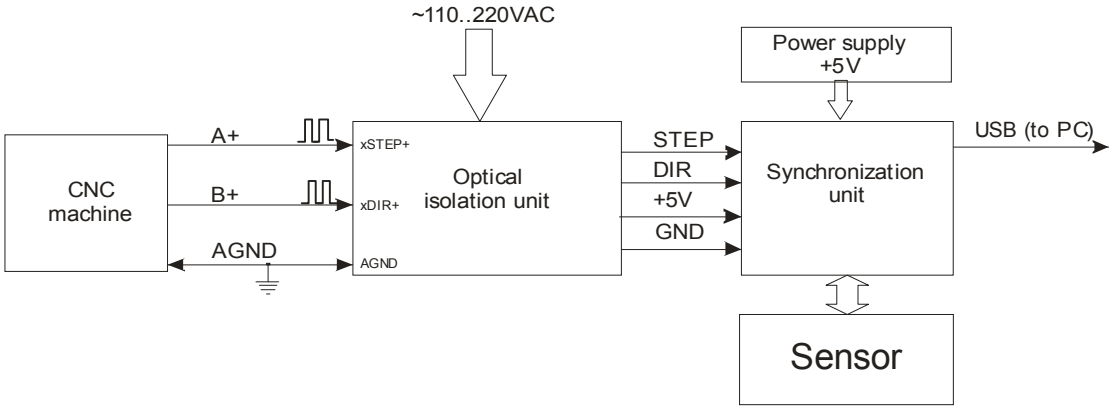


### 8.1.4. Connection to machines with command signal pulses or with differential output encoder (for example, Beaver 26AVST with servo-controller)

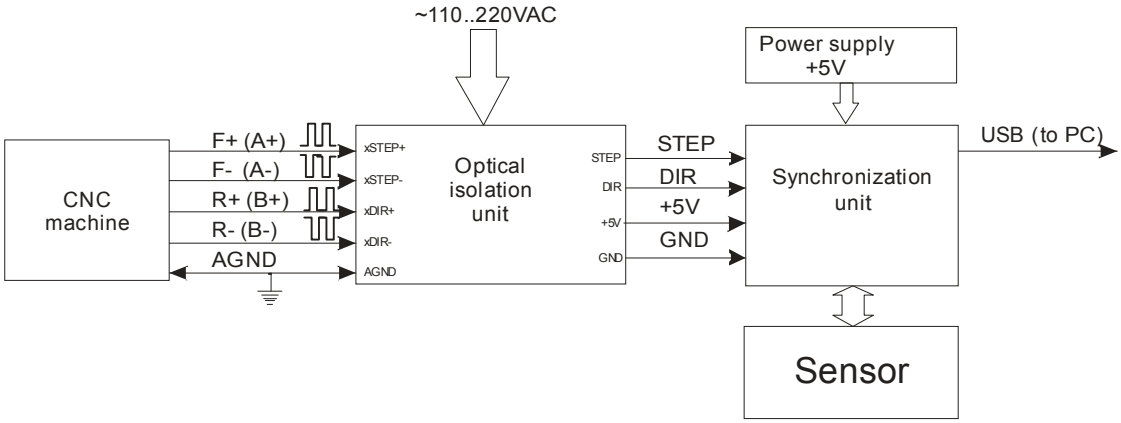


### 8.1.5. Connection to machines with sinusoidal encoder signals (3 wires)

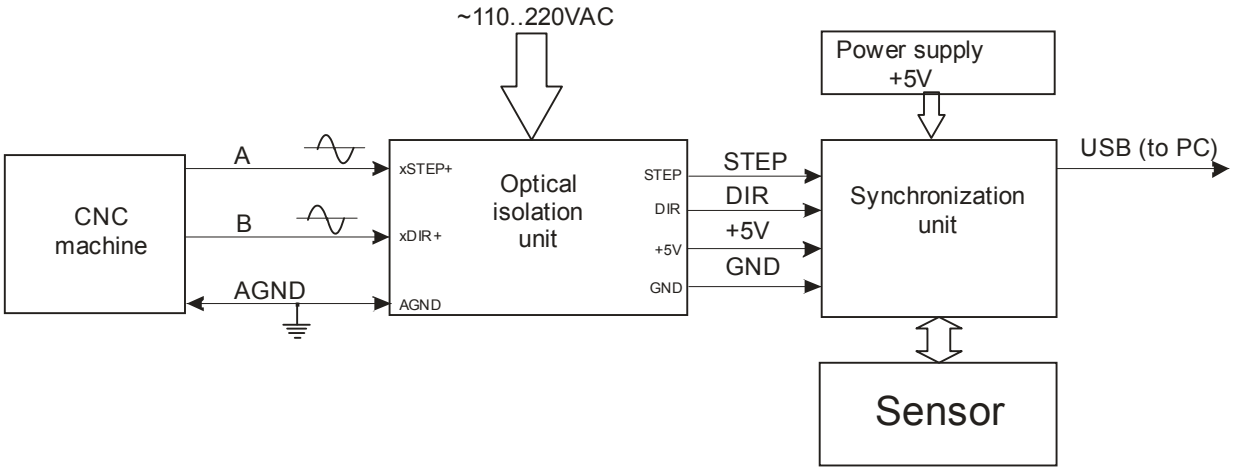

12

### 8.1.6. Connection to machines with sinusoidal and differential encoder signals (5 wires)

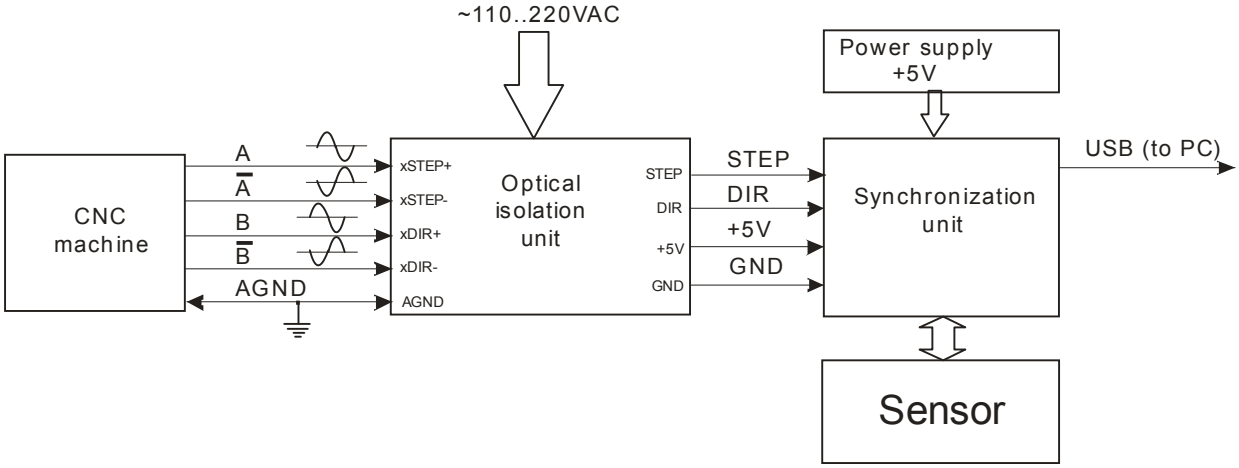


## 8.2. Binocular sensor connection

Connection of the system to the machine is analogous to the connection described in par. 8.1. with the exception of the method of connection of laser sensor to PC. Data communication from standard sensor is carried out through synchronization unit and USB port of PC, and from the binocular sensor - through Ethernet-port of PC.

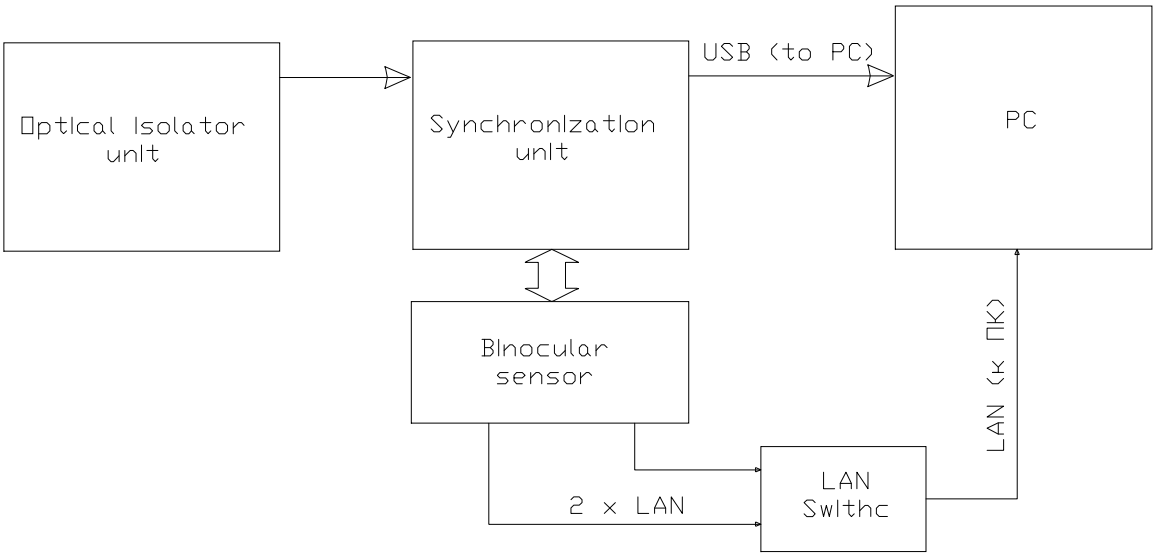

# 9. Connection of the optical isolation unit

## 9.1. Block diagram

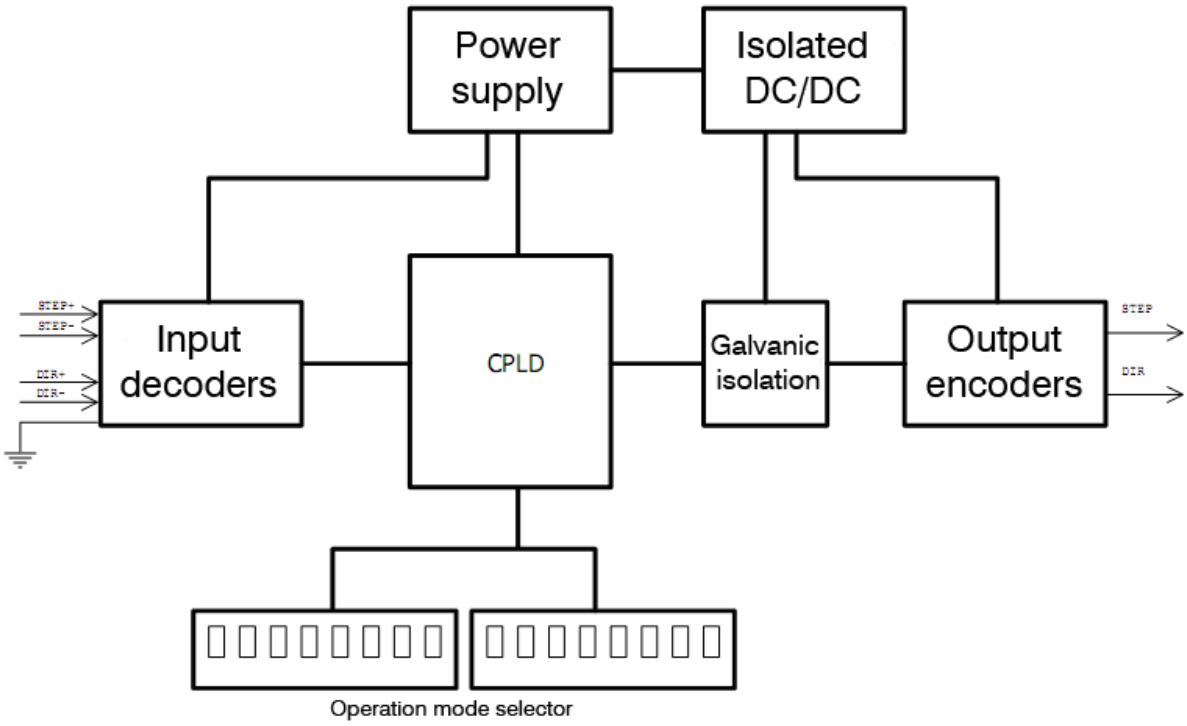


To decode input signals and convert them to levels used for sensor, the unit contains “Input formers”. One of the operation modes of the “Input formers” is chosen depending on the position of the "Operation mode selectors ".

The input decoder (CPLD) supports the following synchronization signals from different sources, such as:

CMOS/TTL command signals for control of stepper along the X axis;
encoder on the X axis with pulsed output; encoder
on the X axis with sinusoidal output; encoder on the
X axis with differential pulsed output;
encoder on the X axis with differential sinusoidal output.

The optical isolation unit forms STEP and DIR signals for the synchronization unit

| | |
|---|---|
| ⓘ | **INFORMATION**<br>The use of CPLD (programmable logic microcircuit) makes it possible to decode practically all input signals and form output synchronization signals for the laser sensor. |

## 9.2. Selection of the synchronization option

Selection of the synchronization option is made by means of micro-switches on the optical isolation unit.

| | |
|---|---|
| ⚠ | **ATTENTION!**<br>When the “LaserProbe 4500” 3D scanning system is ordered for use on a specific machine, the optical isolation unit is supplied with pre-set micro-switches. |

### 9.2.1. Connection to machine with direct stepper control

Diagram of control signals:

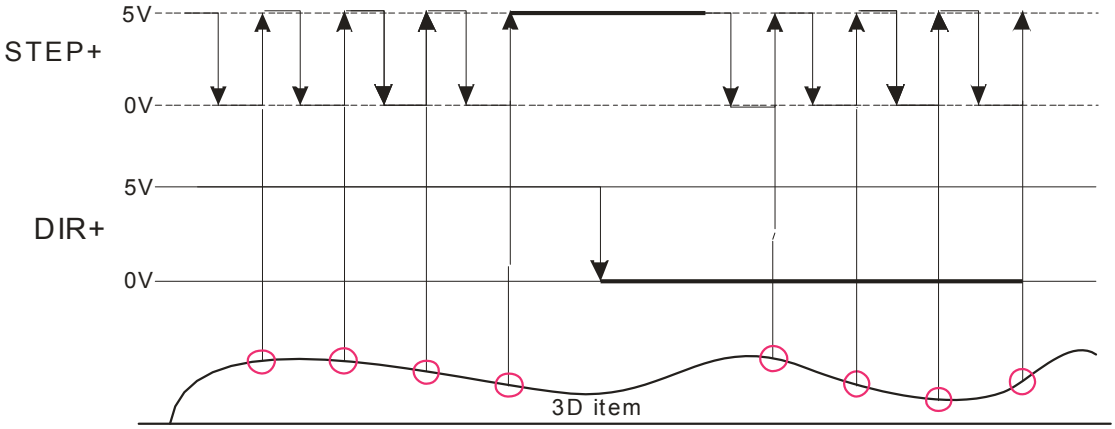


To decode the above signals, the micro-switches of the optical isolation unit must be in the position shown in the following figure:

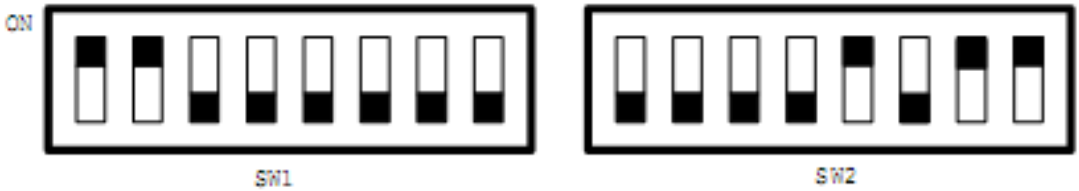


### 9.2.2. Connection to machine with encoder impulse signals

Diagram of control signals:

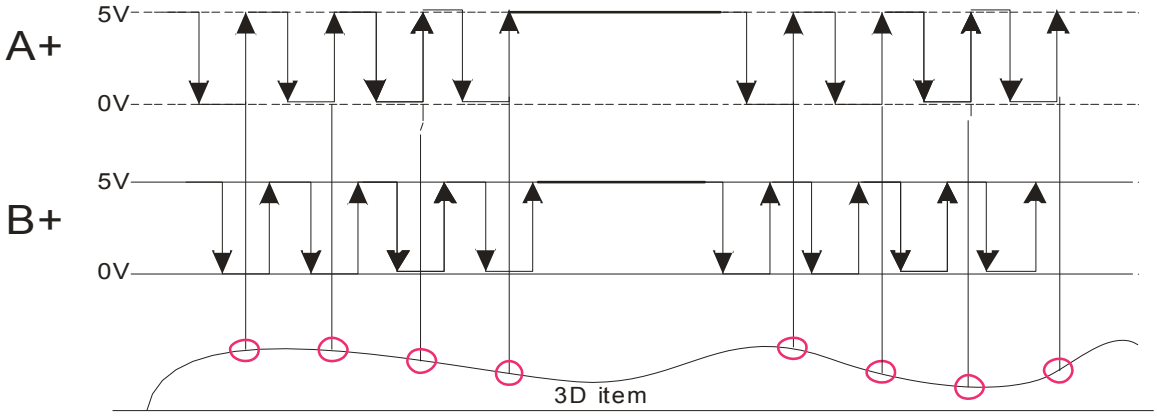


To decode the above signals, the micro-switches of the optical isolation unit must be in the position shown in the following figure:

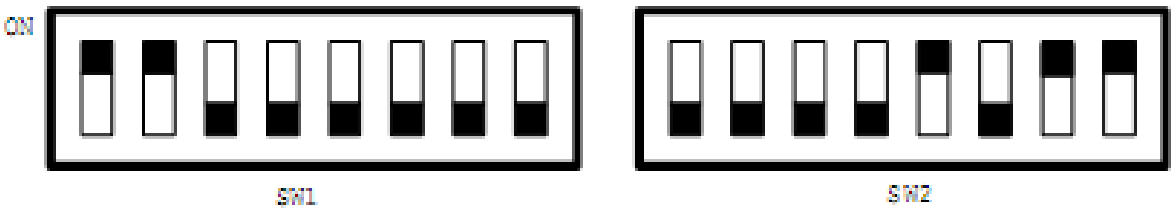


### 9.2.3. Connection to machines with impulse differential encoder signals

Diagram of control signals:

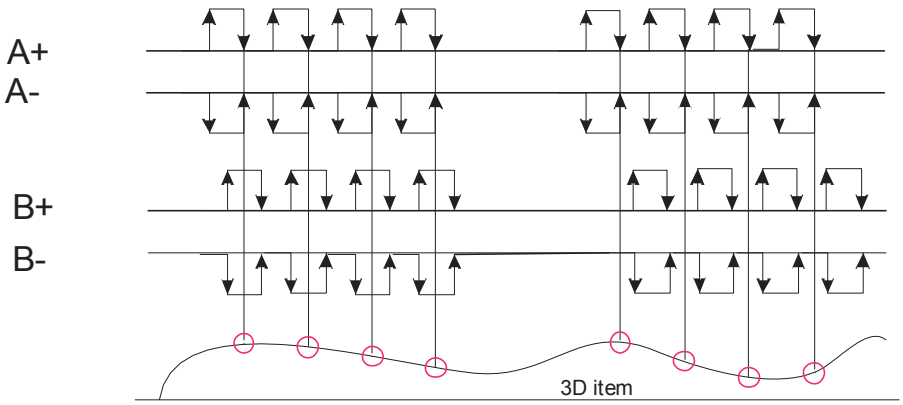


To decode the above signals, the micro-switches of the optical isolation unit must be in the position shown in the following figure:

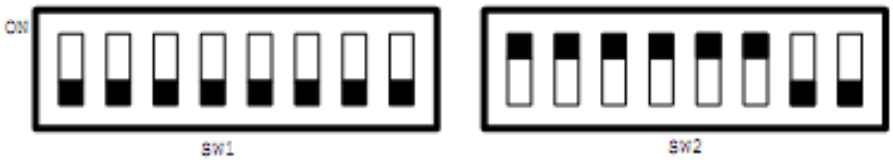


### 9.2.4. Connection to machines with analog encoder signals

Diagram of control signals:

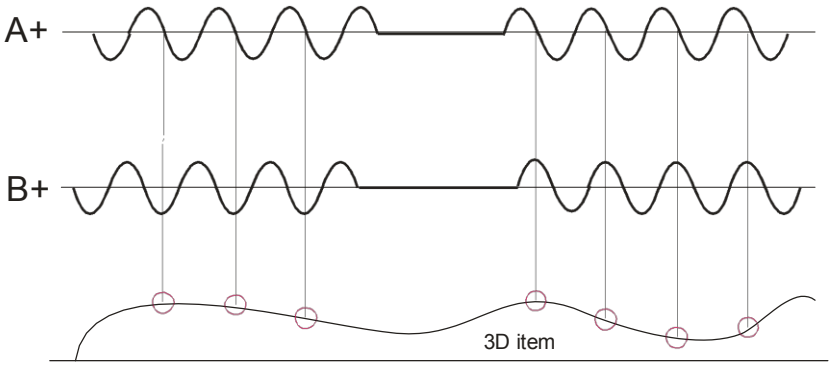


To decode the above signals, the micro-switches of the optical isolation unit must be in the position shown in the following figure:

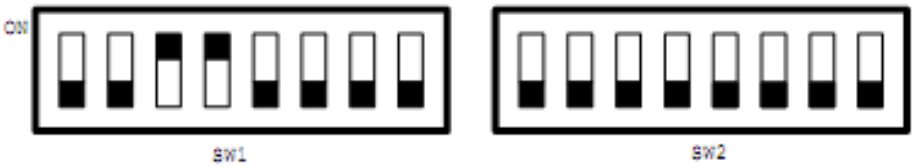


### 9.2.5. Connection to machines with analog differential encoder signals

Diagram of control signals

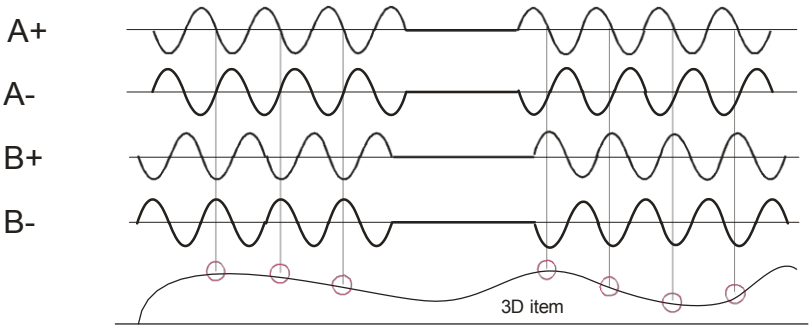

To decode the above signals, the micro-switches of the optical isolation unit must be in the position shown in the following figure:

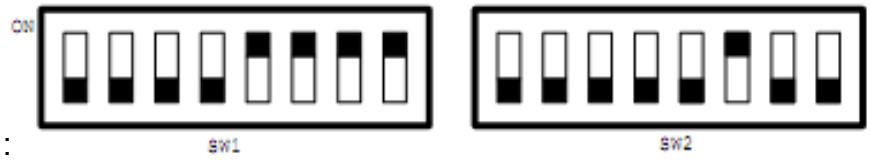


:

### 9.2.6. Connection to machines with analog differential encoder signals

Diagram of control signals:

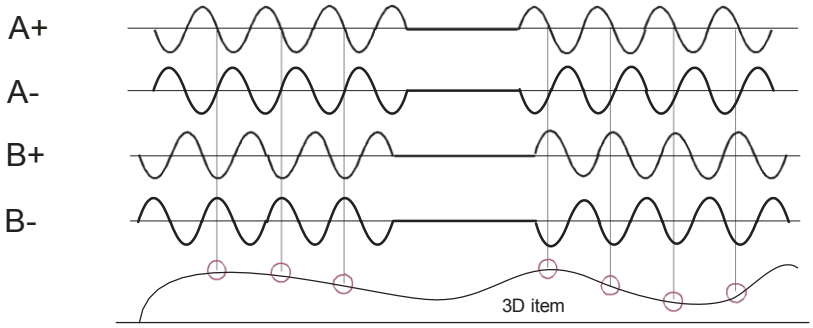


## 9.3. Connection to the synchronization unit

The optical isolation unit is supplied together with a cable whose 15-conductor connector on the one end is connected to the synchronization unit while four wires on the other end are connected to the optical isolation unit. Wire designations are shown in table:

| Wire color | Designation | Terminal on the optical isolation unit |
|---|---|---|
| Red | Power of the input part of the synchronization unit | +5V |
| Blue | Step signal for the synchronization unit | STEP |
| White | Direction signal for the synchronization unit | DIR |
| Brown | Earth for the synchronization unit | GND |

# 10. The “Dorgonia” software

## 10.1. Basic functions

The software is intended for:

Formation of the line-by-line scanning file for CNC system (G-codes), in- cluding the defining of the scanning region, discretization interval along the X and Y coordinates and scanning speed;

Parameterization of the laser sensor, including adjustment of smoothing filter and filtering of measurement errors;

Data takeoff from the laser sensor;

Visualization of data;

Filtering and smoothing of results;

Formation of standard format files **.stl, .dxf, .txt**

Simplification (size reduction) of scanning files

## 10.2. Program start

After starting, the program checks for availability of the USB cable for connection to the synchronization unit. If the device is found, availability of the license and its validity are checked, and the laser sensor is switched on. The emergence of the working window (Fig. 8) shows that the system is normal operation mode.

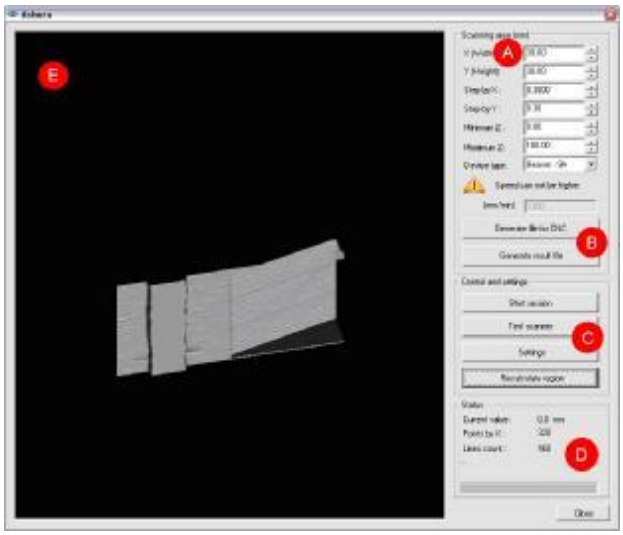


**Figure 8**

The window consists of several sections:

"A" – section for setting of scanning parameters;
"B" – section for formation of files;
"C" – section for control and settings;
"D" – status section;
"E" – section for imaging of the scanned item.

## 10.3. Settings

### 10.3.1. Positioning of the sensor

The sensor must be positioned in such a way that the item to be scanned is located within the sensor working range. An example of positioning of the sensor with the base distance of 140 mm and range of 100 mm is shown in Fig. 9. To check correctness of the position, the **"Test scanner"** button must be pressed (section **"C"** of the working window) and sensor readings must be verified ("current value" in the section **"D"**). For the table plane where the item is located the sensor reading must be a little less than 100 mm.

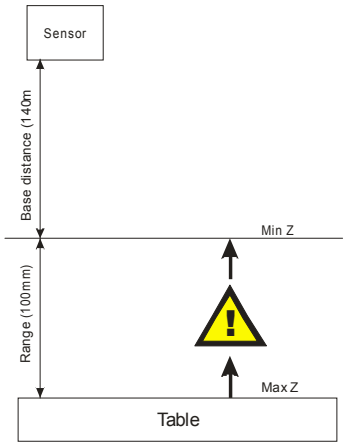


**Figure 9**

### 10.3.2. Setting-up of the laser sensor parameters


To change laser sensor settings, call the setting window by pressing the **"Settings"** button (Section **"C"**). The view of the window is shown in figure.

The **"Laser settings"** window displays:

1) Unchangeable service information about the sensor: internal divider installed; type of the device; serial number, working range and base distance; type of synchronization.

2) Two fields for setting filters implemented directly in the laser sensor. The first filter deals with the moving average. Maximum allowable value of the filter width is 128. The second filter deals with the result delay time at an interval of 5 ms. After changing the settings, press **"OK"** button to save them.

### 10.3.3. Setting-up of program filters

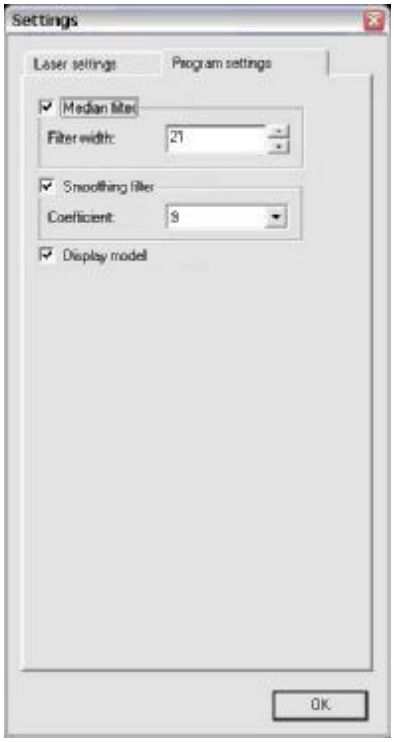


To change settings of the program filters, call the settings window by pressing the **"Settings"** button, go to the **"Program settings"** tab, set the required width of the median filter and smoothing filter (Gaussian core), and enable or disable display of the model. To save the settings, press **"OK"**.

The **"Model display"** switch is intended for enabling/disabling of the model display function. This function is used when RAM is not sufficient

The **"Use binocular sensor"** switch is intended for using an RF603B binocular sensor, the "Filter width" field is intended for setting value of the median filter which processes the image obtained from the binocular sensor.

The **"Use circular scanning"** switch is intended for using the system on a machine with rotating axis.

### 10.3.4. Setting-up of the scanning parameters

Before scanning is started, it is necessary to use section **"A"** to define the size of the scanning field (X - width, Y – field length), discretization interval along the X and Y coordinates, range of heights of the item to be scanned (Z minimum and Z maximum) and select the type of machine whereto the scanner is connected. After the parameters are set, the program calculates the allowable scanning speed and displays it in the parameters windows

## 10.4. Formation of the scanning file for CNC

To form the scanning file for the machine CNC system, it is necessary to set scanning parameters according to par. 10.3.4, press the **"Form file for CNC"** button in the section **"B"** of the program working window, and define the place in the PC memory where the control file must be written. The output text file contains control G-codes for correct movements of the machine.

## 10.5. Scanning of the item

To perform scanning it is necessary to:

use control program for CNC to open the file formed by the "Dorgonia" program according to par. 10.4;

position the machine movement system to a point from which scanning must be started;

press the **"Start session"** button in the section **"C"** of the program working window;

start the machine to execute the program.

The task execution time depends on the size of the scanning region, speed and step values with which the carriage moves along the X and Y axes

After the machine has executed the program, it is necessary to switch the scanning mode off by releasing the **"Start session"** button.

## 10.6. Formation of the result file

The result of scanning is displayed in the section **"E"**. Control of the item image in this section is possible with the help of the mouse pointer:

- dragging of the mouse with the left key pressed – rotation of the item;
- dragging of the mouse with the right key pressed – movement of the item;
- scrolling with the mouse – zoom-in and zoom-out of the item (scaling).

To obtain the result file, it is sufficient to press the **"Form result file"** button, select the file type (STL/DXF/TXT) in the emerging window, enter the file name, select file folder for saving and press the **"Save"** button.

**Note:** when working with 64-bit PC, the program offers to perform simplification (STL-file size reduction) before saving results, which is important for scanning large-size objects or for fine-pitch scanning.

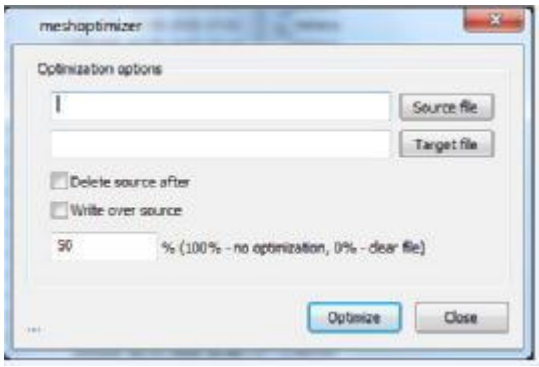


In the window write percents of file reducing and save file.

To make changes in the region already scanned (discretization interval along the X or Y axis, length and width of the region), it is necessary to enter new values and press the **"Recalculate region"** button (section **"C"**). To return to the initial view of the model (if filters were used and limits along Z were set), it is sufficient to switch off the filters and press the **"Recalculate region"** button.


# 11. Scanning of bodies of rotation

To carry out scanning using rotating axis, use is made of the same principle that is employed for scanning of 3D objects on a plane. The only difference is that one of the axes is used as a rotating one.

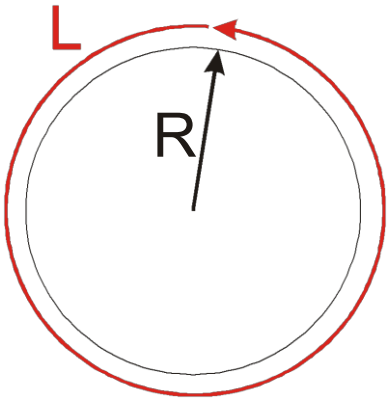


There are two scenarios of scanning: 1) (spiral one) the rotating axis is X axis, and scanning is performed circumferentially, then, sensor is shifted along Y axis over the workpiece by a predetermined step, and scanning in circumferential direction is repeated; 2) the rotating axis is Y coordinate, and scanning is carried out along the entire length of the workpiece, then, the workpiece is rotated by a required step and the process is repeated.

To preset the width of the scanning region in the program, it is important to know the circumference of the rotating axis (L in the figure).

**Example:** It is necessary to scan a carved chair leg. The circumference is 200 mm, the leg length is 700 mm, the scanning step required is 0.2 mm. Spiral scanning method is used. Standard 140/100 sensor is employed.

Then, the settings are as follows:

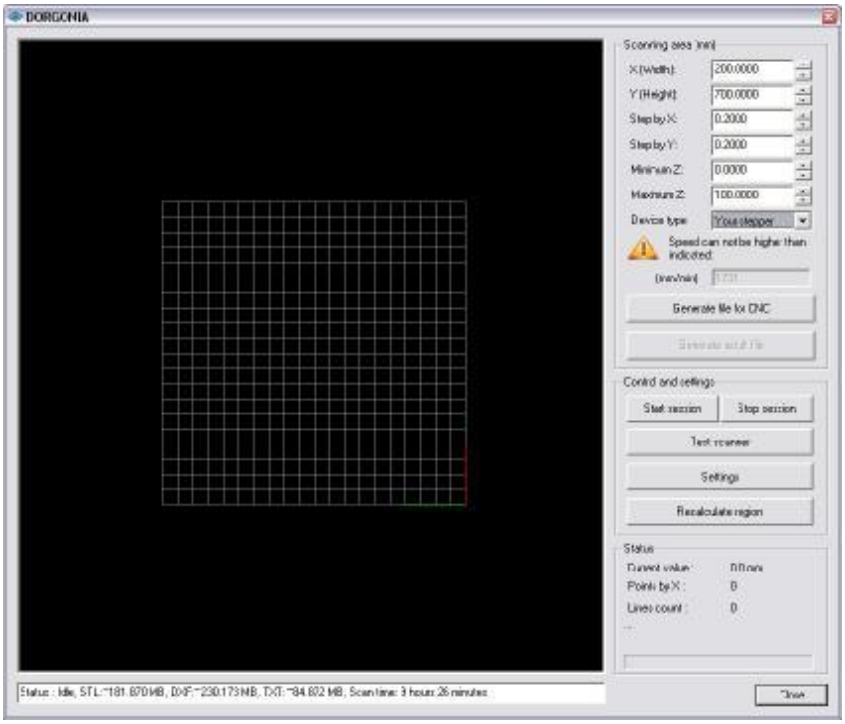

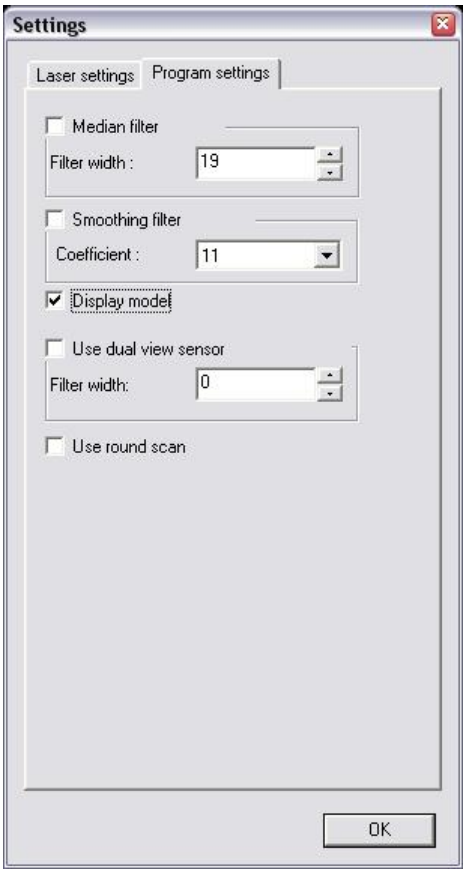


An example of scanning result

After scanning, we obtain a plane expanded 3D model. Then, this plane model is sent to production in the same mode as the scanning mode

## 12. Example of filter operation

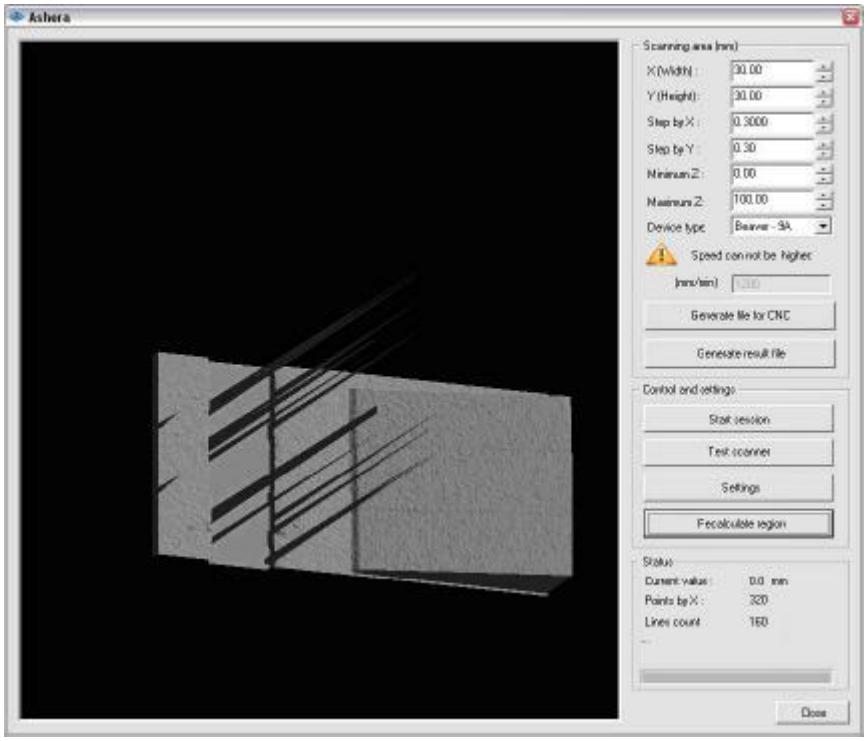


**Figure 10**

Fig. 10 shows the result of scanning obtained without programmed filtration used. The peaks in the picture are caused by the influence of vertical walls of the item.

Fig. 11 shows the image of the item in the case where “Median filter” with a width of 9 was used (see par. 10.3.3.). As seen in the picture, the peaks disappeared

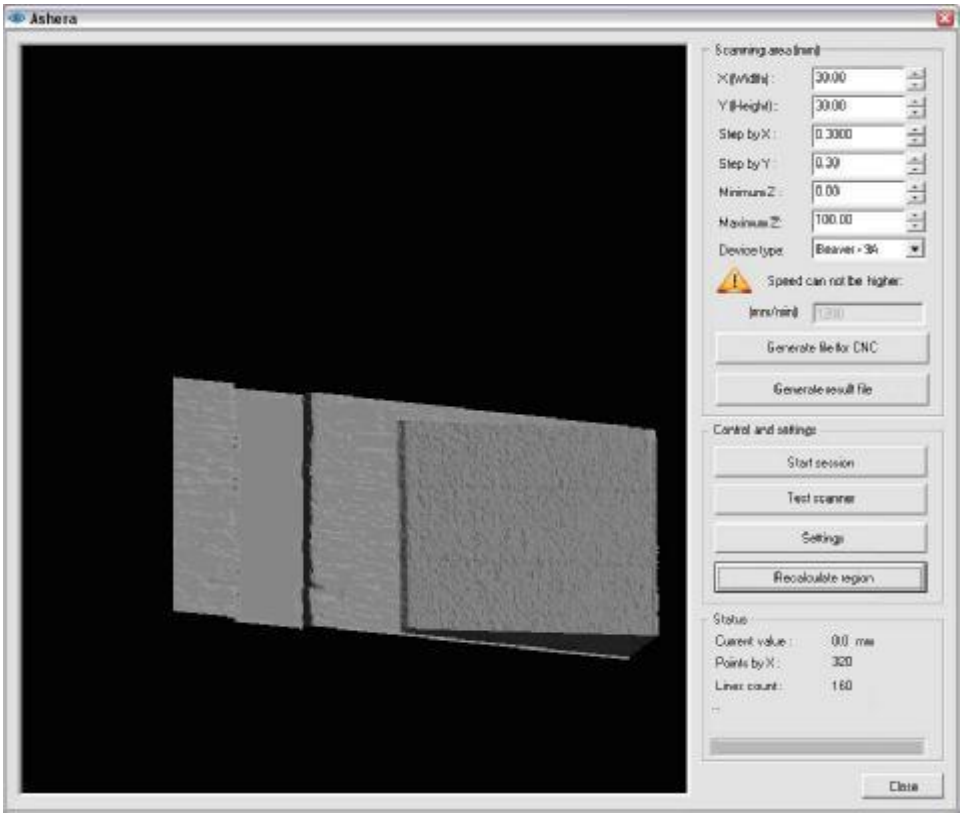


**Figure 11**

A substantial reduction of the image noise can be achieved by using programmed smoothing (see p.10.3.3.).

# 13. Example of item designation when ordering

**RF071 – Dx – Ox – Cx – Bx – Rx**

| Element | Description | Variants | Notes |
|---|---|---|---|
| **RF071** | The name of device | - | |
| **Dx** | Sensor type | D0 - Standard RF603;<br>D1 – Binocular RF603B. | |
| **Ox** | Optical isolation unit presence | O0 –Without unit (for the Beaver 9A, 12A, 12AV, 18A, 24A, 26A only);<br>O1 – With optical isolation unit | |
| **Cx** | Type of the cable | C0 – without cables;<br>C1 – CABLE-002-4;<br>C2 – CABLE -003-26AVST;<br>C3 – CABLE -004-6;<br>C4 – CABLE -005-3;<br>C5 – CABLE -006-3;<br>C6 – CABLE -007-3;<br>C7 – CABLE -008-5 25AVLT8;<br>C8 – CABLE -009-15. | |
| **Bx** | Laser sensor base distance | See options in the manual<br><br>Example: B140 (base distance – 140 mm) | |
| **Rx** | Laser sensor working | See options in the manual | |

| | | | |
|---|---|---|---|
| | range | Example: R100 (working range – 100 mm) | |



Cable selection table for different CNC systems:

| CNC machine | Cable type | Optical isolation unit need |
|---|---|---|
| Beaver 9A, 12A, 12AV, 18A, 24A, 26A | CABLE-009-15 | No |
| Beaver 24AVST | CABLE -002-4 | Yes |
| Beaver 25AVLT8 | CABLE -008-5 25AVLT8 | Yes |
| Beaver 26AVLT8, Beaver 26AVST | CABLE -003-26AVST | Yes |
| BigZee Pro, BigZee VG | CABLE -002-4 | Yes |
| MS-24/1 | CABLE -002-4 | Yes |
| ATS760 | CABLE -007-3 | Yes |
| Rigid A64 | CABLE -006-3 | Yes |
| HEIZ CNC-Technik High-Z / S-series | CABLE -004-6 | Yes |
| Jinan N-1224 | CABLE -002-4 | Yes |
| Artisman S-series | CABLE -002-4 | Yes |
| PureLogic PLC 330 | CABLE -005-3 | Yes |
| Stepdrive-R4-Opto | CABLE -007-3 | Yes |

**Example:** RF071 – D1 – O1 – C2 – B140 – R100 –"LaserProbe 4500" system for Beaver - 26AVST8 CNC
with binocular sensor RF603B-140/100 (140 mm base distance, 100 mm working range).

# 14. System requirements

Stable work of the "Dorgonia" software requires the following system.

| | |
|---|---|
| **Processor** | not lower than Intel Pentium 4 2.0GHz |
| **RAM** | not less than 1024 MB (recommended 4096MB) |
| **Disk space** | not less than 20 GB, NFTS file system required |
| **Video card** | ATI/NVidia and not less than 256MB of video memory |
| **Operating system** | Windows 2000/ Windows XP |
| **Other** | USB 2.0 (and Ethernet for RF603B) is required |

# 15. Warranty

Warranty period of the “LaserProbe 4500” system is 24 months from the date of putting in operation. Guaranteed storage time is 12 months.

# 16. Troubleshooting

| Problem | Cause | Solution |
|---|---|---|
| The «Dorgonia» program gives an error message: «Error: no scanner | 1. USB drivers not installed.<br>2. USB cable not connected. | 1. Reinstall drivers from original compact disc.<br>2. Check USB cable connection. |
| The «Dorgonia» program gives an error message: «Error: scanner does not respond» | 1. Sensor is not connected to synchronization unit.<br>2. Power supply unit (+5V) not connected to the synchronization unit. | 1. Check connection of the sensor to the synchronization unit.<br>2. Check connection of power supply to the synchronization unit. |

| | . | |
|---|---|---|
| The «Dorgonia» program gives an error message: «Error: data file is empty » | 1. There are no signals of synchronization with the machine. | 1. Using oscilloscope, check for availability of synchronization signals from the machine (if optical isolation unit is in place, this must be done through the optical isolation unit). It is possible that no power is supplied to the optical isolation unit (if available). |
| The «Dorgonia» program gives an error message: «Erroneous data file» | 1. There is a problem with synchronization signals (STEP/DIR) coming from machine (through the optical isolation unit, if available). | 1. Using oscilloscope, check for availability of STEP/DIR signals |

# 17. Installation guides

## 17.1. General

Prior to installation:

Acquaint yourself with the machine-tool circuitry.

Look into description of 3D scanning system, operation principle and interfacing/connection options.

Select required computer-machine tool interfacing type according to the machine-tool circuitry. To accomplish this, you should understand: 1) how the motion system of the machine works; 2) which motors are used to move spindle along axes; 3) (if stepping drivers are used) look into description of stepping drivers (descriptions can be downloaded from the manufacturer site).

Set parameters in the program to work with a standard or binocular sensor.

| | |
|---|---|
| ⚠ | **Important:** Connect the machine bed and the cabinet containing motor drivers to ground (to common ground). If spindle is not grounded also connect it to common ground. |

Connect 3D scanning system to the machine (connection is to X co-ordinate only) and check for normal operation.

**Attention:** When connecting, check the status of tick mark "Use binocular sensor" in the Dorgonia program settings (**Settings>Program settings**). If a standard sensor is used remove the tick mark, and if a binocular sensor is used put the tick mark in place.

## 17.2. Input circuits of synchronization and optical isolation units

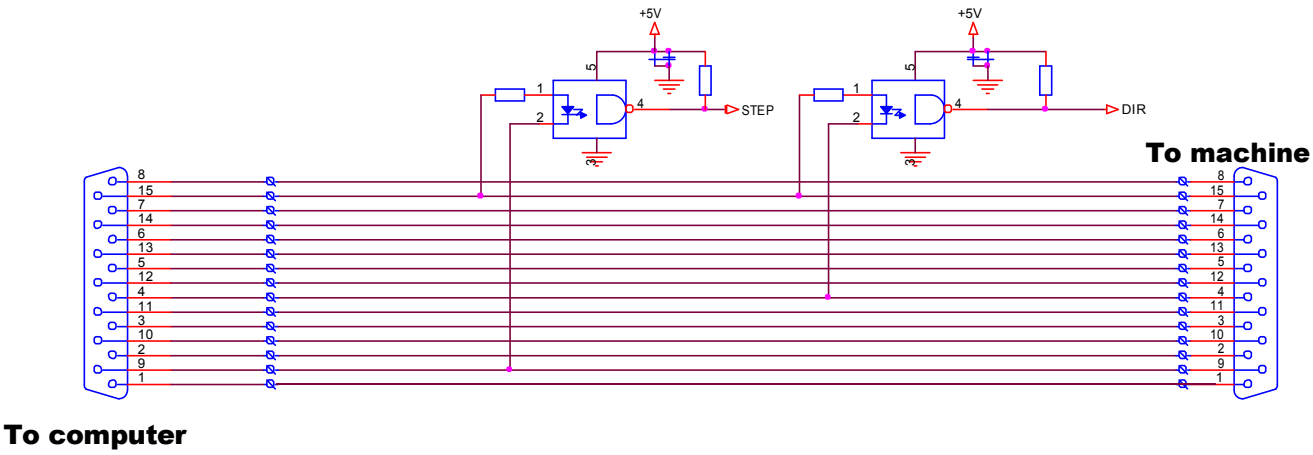


**. Figure 12 Input circuits of the synchronization unit**

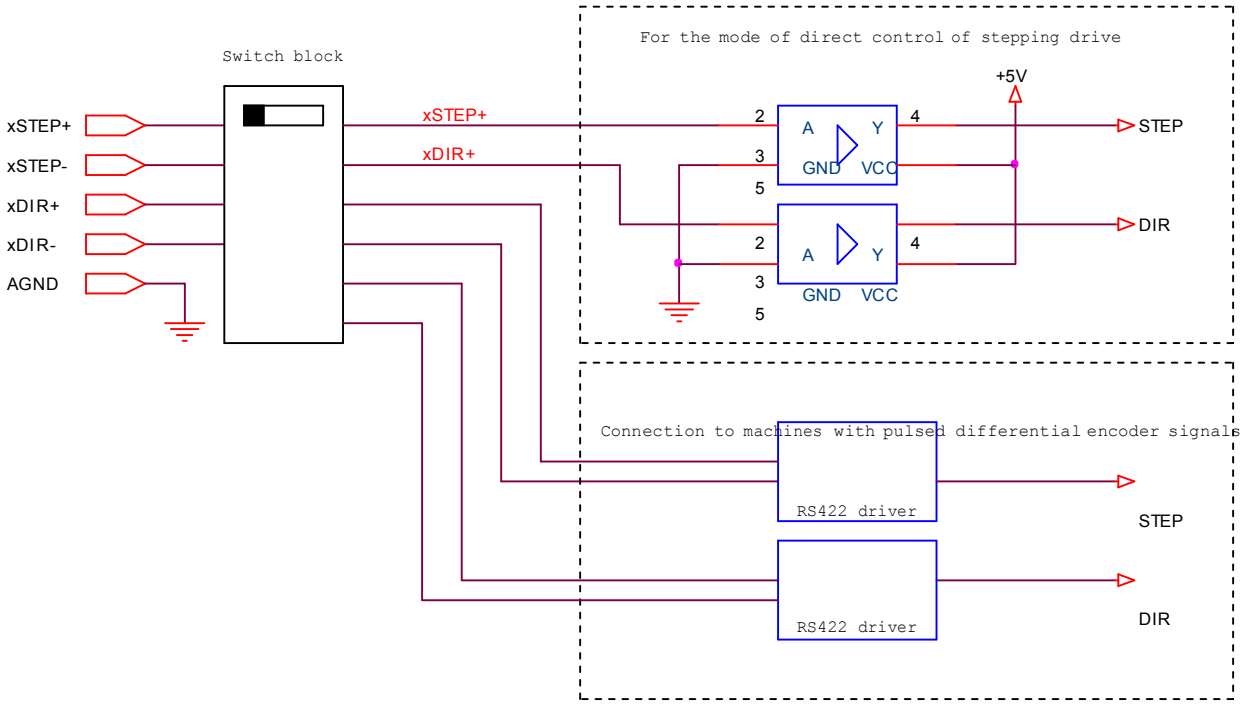


**Figure 13 Input circuits of the optical isolation unit**

## 17.3. Connection to systems with stepping motors

### 17.3.1. Connection to Leadshine M542/YAKO YKB2608 and similar drivers

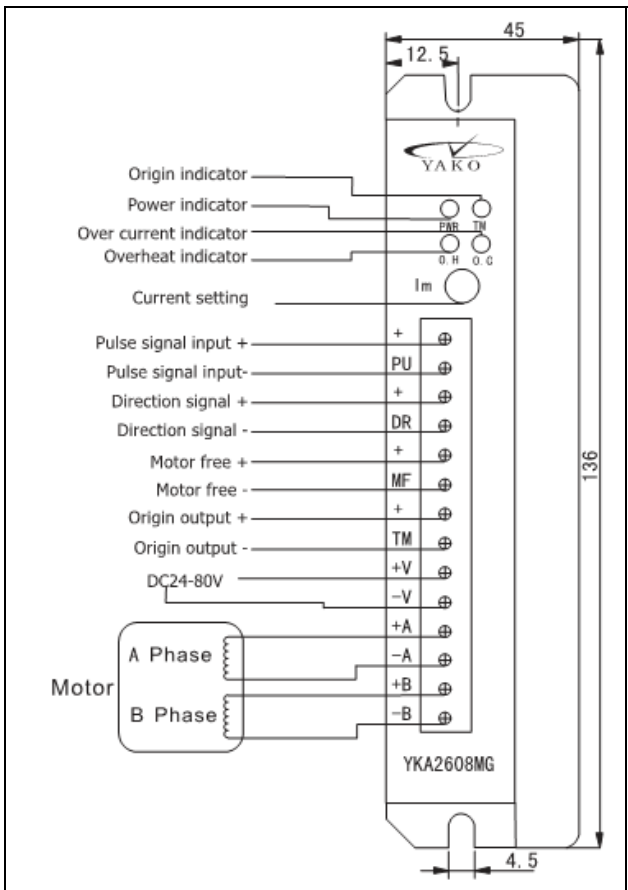


**Figure 14 Driver YAKO**


**Figure 15 Driver Leadshine**

Prior to working with these drivers, study their operation manuals which can be downloaded from manufacturer site.

With reference to the work diagram ("Sequence Chart of Control Signals" Leadshine page 8 or "Input signal timing diagram" YAKO page1), it is necessary to use interfacing method for a machine with direct control of stepping driver, see **8.1.1.**, and set switches in the optical isolation unit according to the following scheme:

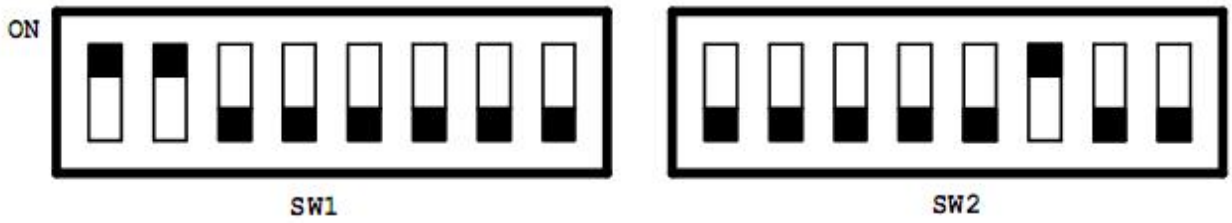


**Figure 16 Position of switches in the optical isolation unit for stepping drivers Leadshine M542/YAKO YKB2608 and similar**

Two methods of interfacing or connection are possible: with the use of optical isolation unit or without using it.

**First method (with optical isolation unit):**

find “ground” on the machine with reference to which the signals PUL+/PUL-, DIR+/DIR- (DR, PU) work. The ground terminal is normally located on power supply or on a separate board with marked with "COM".

connect this ground to the AGND input of the optical isolation unit.

connect signals from the X co-ordinate driver: PUL- (PU) to the xSTEP+ input of the optical isolation unit; DIR- (DR) to the xDIR+ input of the optical isolation unit.

**Important:** If the ground for AGND is chosen incorrectly, the system will not work. The program will return error: **Error! Data file empty** or **Error! Check gaging speed**.

**Important:** If the ground for AGND is chosen incorrectly, the system will not work. The program will return error: **Error! Data file empty** or **Error! Check movement speed**

Also, check signal levels to which the optical isolation unit is connected. If the signal level is higher than +7V, the optical isolation unit will fail to function.

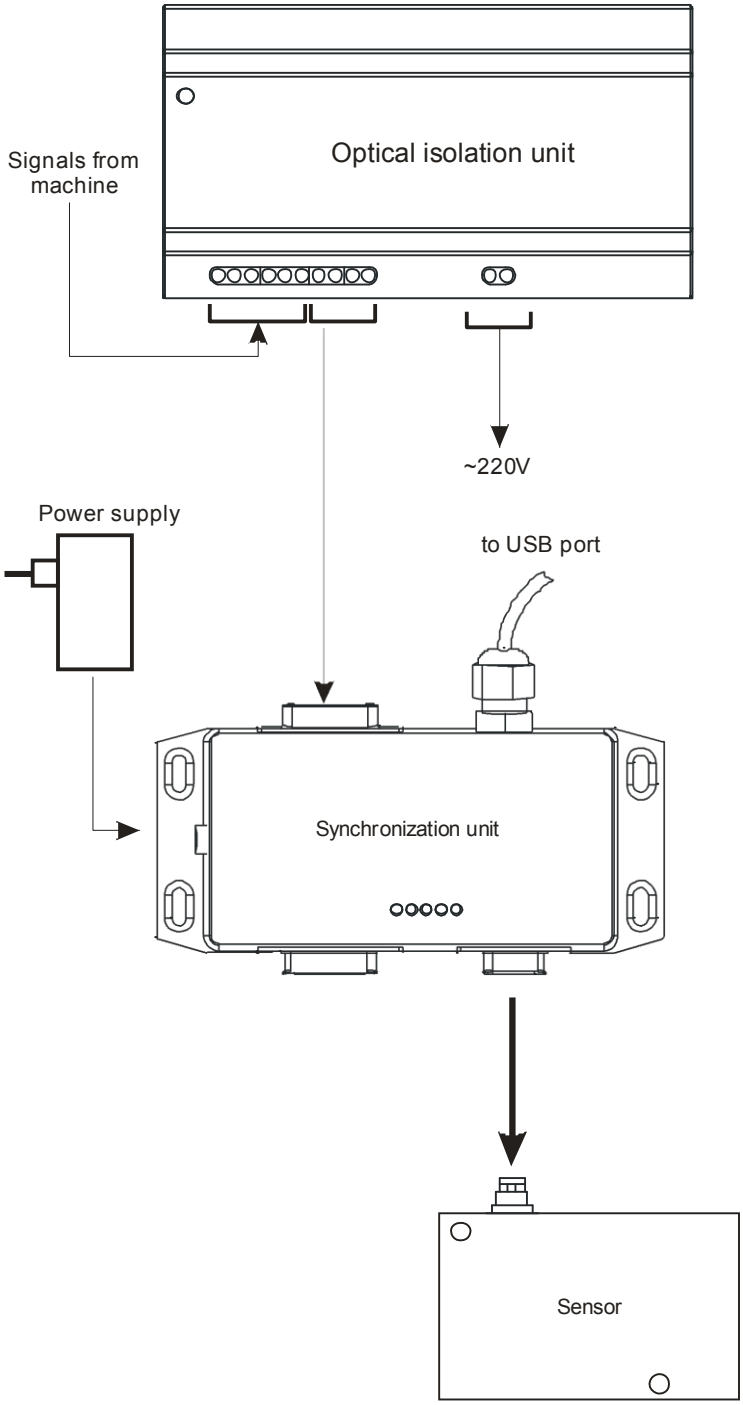


**Figure 17 Interfacing option for a system with a standard sensor**

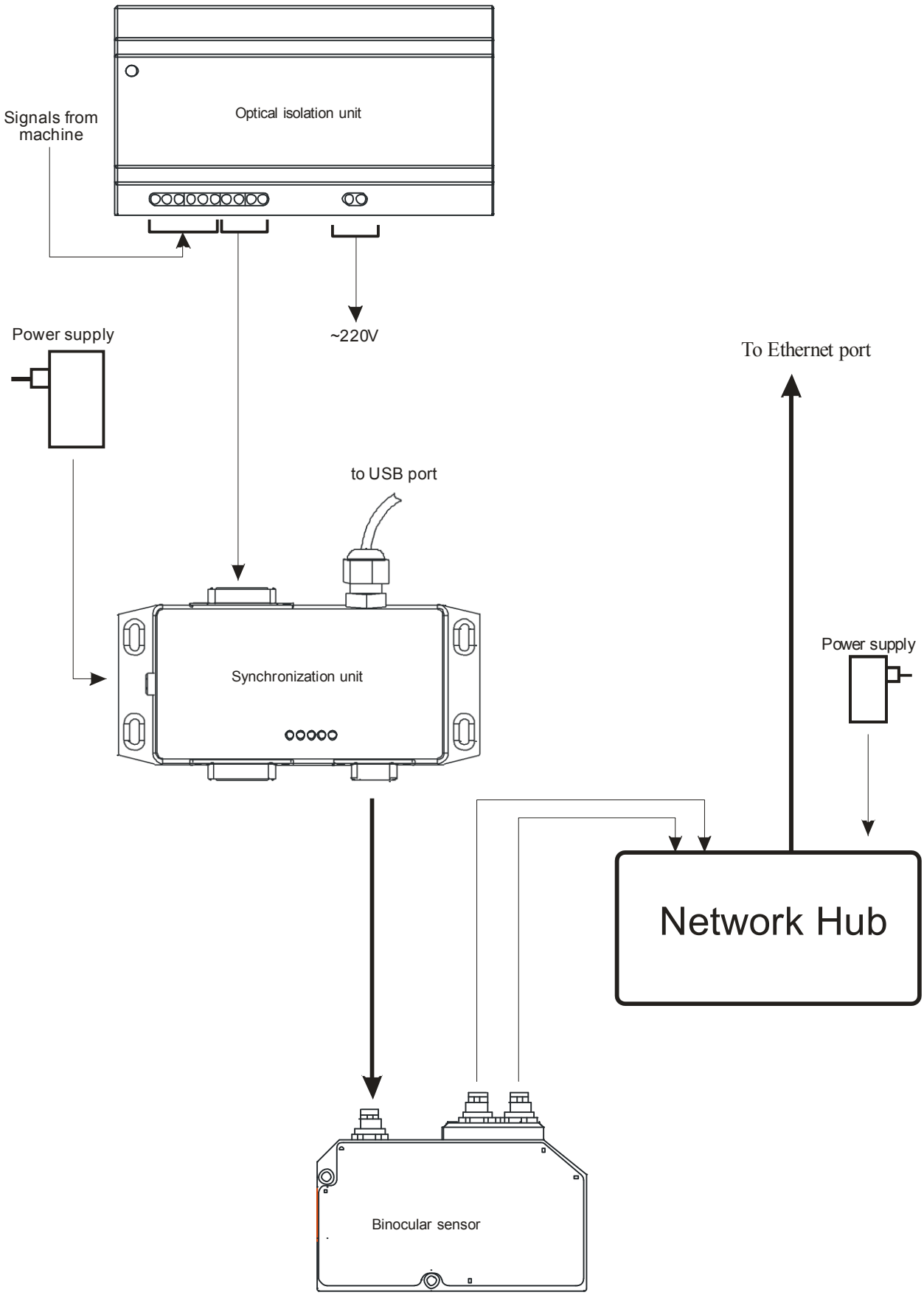


**Figure 18 Interfacing option for a system with a binocular sensor**

**Second method (without optical isolation unit):**

Such interfacing is only possible if control of the machine is implemented using a PCI-board system and NCStudio program. (This option must be checked for functionability for each new model of machine with given characteristics). Connection is made to the X co-ordinate driver.

Use a «CABLE-001-15» -coded cable for connection (15-pin connector cable): Red wire must be connected to PUL+ (for Leadshine) or to "+" (Pulse Signal input + for YAKO) (stepping driver). Blue wire must be connected to PUL- or PU (of stepping driver). White wire must be connected to DIR- or DR (of stepping driver). Brown wire is not used.

| | |
|---|---|
| ⚠ | Also, **check** signal levels to which the synchronization unit is connected. If the level is higher than +7V, the synchronization unit will fail to function |

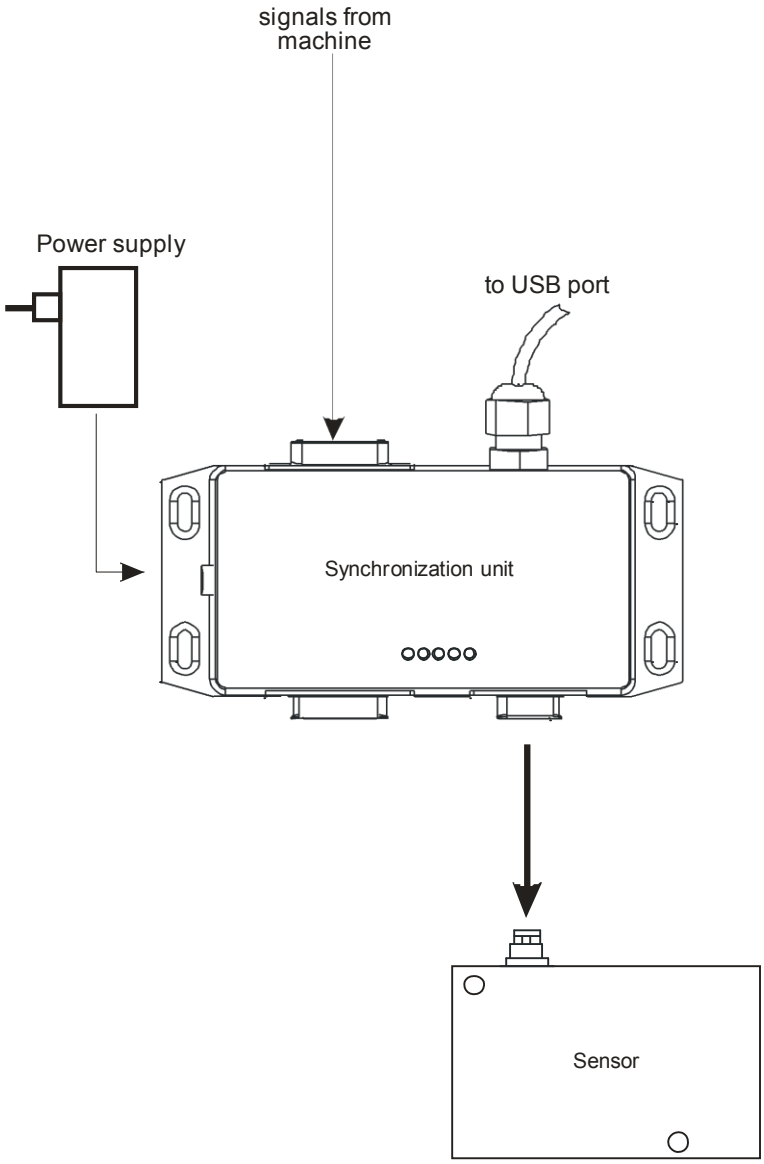


**Figure 19 Interfacing option for a system with a standard sensor**

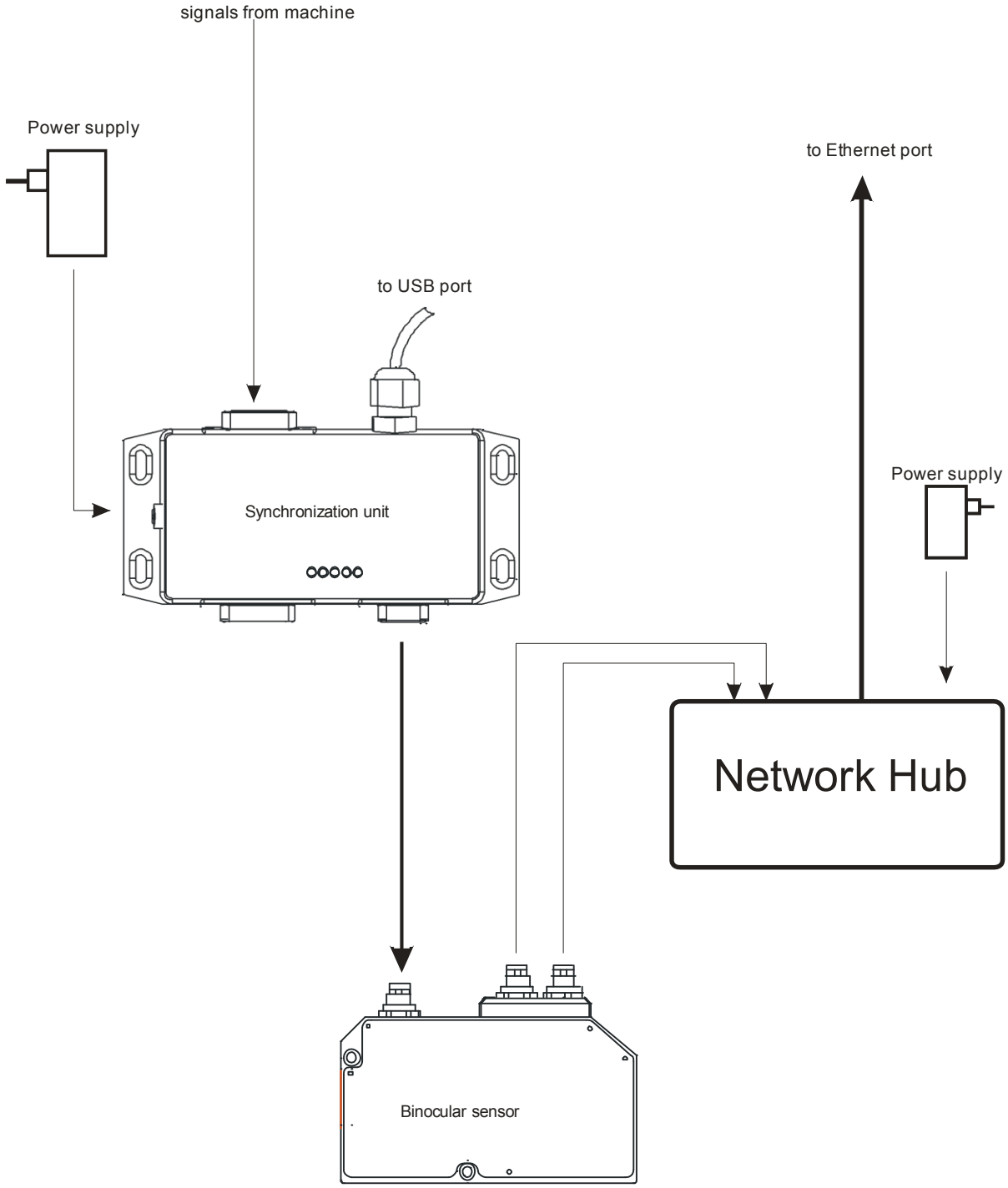


**Figure 20 Interfacing option for a system with a binocular sensor**

## 17.3.2. Connection to systems with servo motors

Prior to working with servo motors, study their operation manuals which can be downloaded from manufacturer site.

Make sure that servo motors are operable in command reception mode via differential interface (sometimes in the servo motor manual they write RS422), which can be looked at in the servo motor parameter settings. If differential interface is actually used (PULS1/PULS2, SIGN1/SIGN2) or (F+/F-, R+/R-), follow instructions of this chapter for making settings. If STEP/DIR data reception mode is selected in the settings, you should refer again to Chapter 3 and follow instructions in the servo motor manual to connect signals to the optical isolation unit with subsequent setting of the switches.

**Figure 21**
**Servo amplifier and servomotor**
**Panasonic Minas A4 series**

**Figure 22**
**Servo amplifier and servomotor**
**Mitsubishi Electric**

It is necessary to use the option of interfacing for machines with pulsed differential encoder signals (RS422), see par. 8.1.4. Set the switches in the optical isolation unit according to the following scheme:

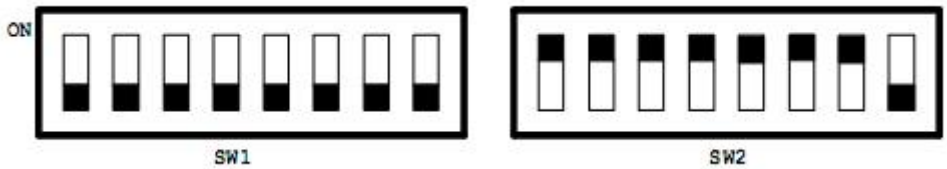


**Figure 23 Position of switches in the optical isolation unit in the mode "Interfacing for machines with pulsed differential encoder signals (RS422)"**

To connect:

find “ground” with reference to which the signals PULS1/PULS2, SIGN1/SIGN2 or F+/F-, R+/R- work. The ground terminal is normally located next to main signals and is possibly marked as "COM".
connect this ground to the AGND input of the optical isolation unit.
connect signals from the X co-ordinate driver:
PULS1 or F+ to the xSTEP+ input of the optical isolation unit.
PULS2 or F- to the xSTEP- input of the optical isolation unit.
SIGN1 or R+ to the xDIR+ input of the optical isolation unit.
SIGN2 or R- to the xDIR- input of the optical isolation unit.

The scheme of the system connection is shown in Fig. 17 or 18 depending on sensor type.

| | |
|---|---|
| ⚠ | **Important:** If the ground for AGND is chosen incorrectly, the system will not work. The program will return error: **Error! Data file empty** or **Error! Check gaging speed.** |

### 17.3.3. Connection to systems controlled from LPT-port (Mach3)

To interface 3D scanning system with a Mach3-controlled machine tool, you should order a special LPT-cable; when ordering, two additional parameters should be specified:

STEP pin number of X co-ordinate;
Dir pin number of X co-ordinate;

To find pin numbers, open Config->Port & Pins->Motor Outputs in the Mach 3 menu and look for Step Pin# and Dir Pin# in the X Axis line:

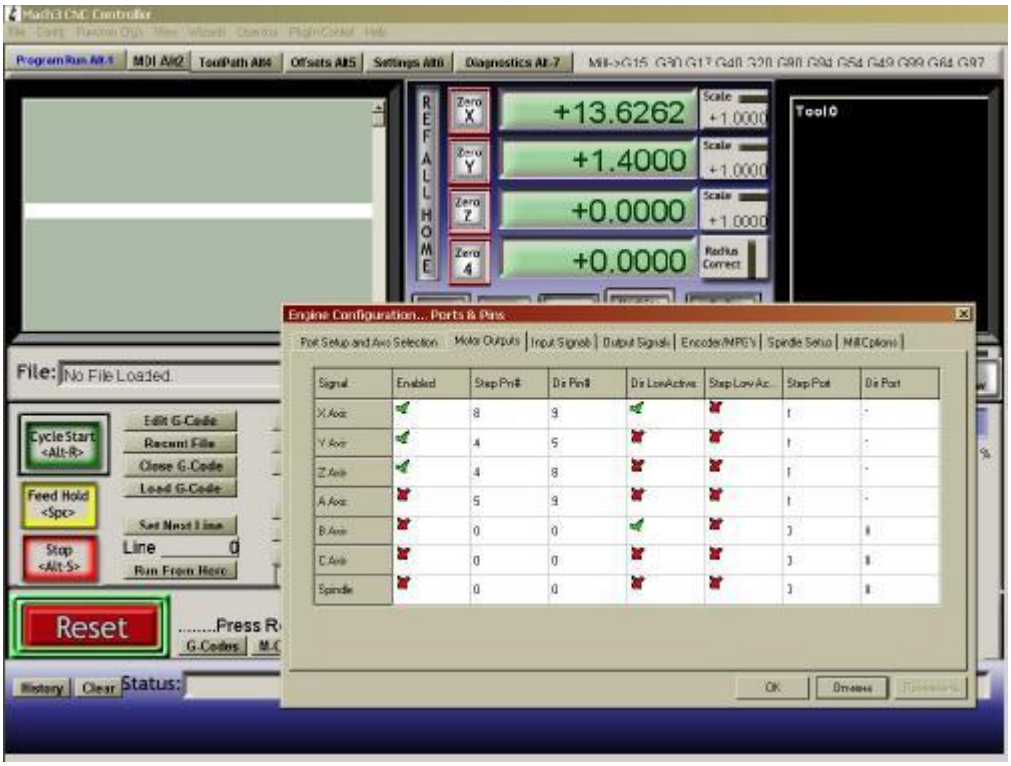


**Figure 24 Setup window of the machine control port**

To connect:

refer to “Connection to machine with direct control of stepping driver ", see par. 8.1.1.
set switches in the optical isolation unit according to the scheme shown in Fig. 6.

Then, it is necessary to connect the signals as follows:

blue wire to the xSTEP+ input of the optical isolation unit;
white wire to the to the xDIR+ input of the optical isolation unit;
brown wire to AGND of the optical isolation unit.

The scheme of the system connection is shown in Fig. 17 or 18 depending on sensor type, while the scheme of connection to the LPT-port is given in Fig.25.

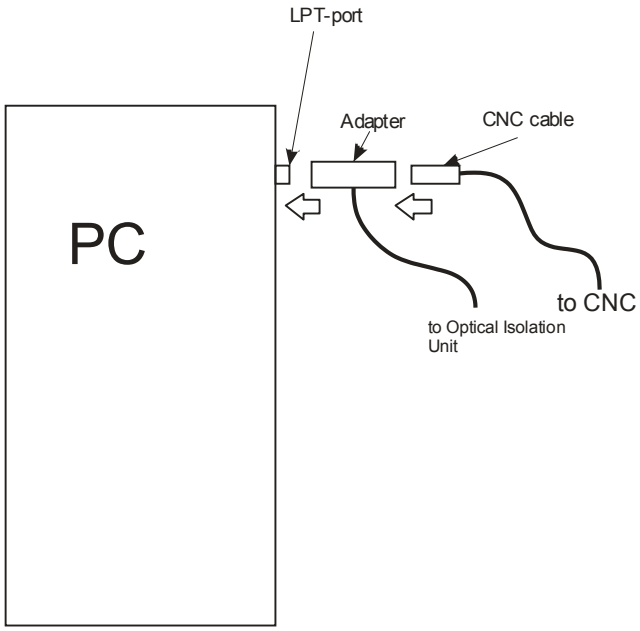


**Figure 25 Order of connection of the scanning system to LPT-port**

# 18. Revisions.

| Date | Release | Description |
|---|---|---|
| 25.10 2009 | 2.0 | Starting document |
| 01.02.2010 | 2.1 | Diagrams and switch positions were revised.<br>Document structure was revised.<br>Dynamic characteristics were added. |
| 01.09. 2010 | 2.2 | The following sections were added:<br>- laser safety and electromagnetic compatibility,<br>- description of binocular sensor and its connection to the system.<br>Structure of the system ordering was changed. Bid size files simplification procedure was added. The possibility of mounting the system on machines with rotating axis was added. Indication of synchronization unit status was added. |
| 27 12 2010 | 2.3 | The following sections were added:<br>-description of bodies of rotation scanning; installation guides |

# 19. Example of the scanning result

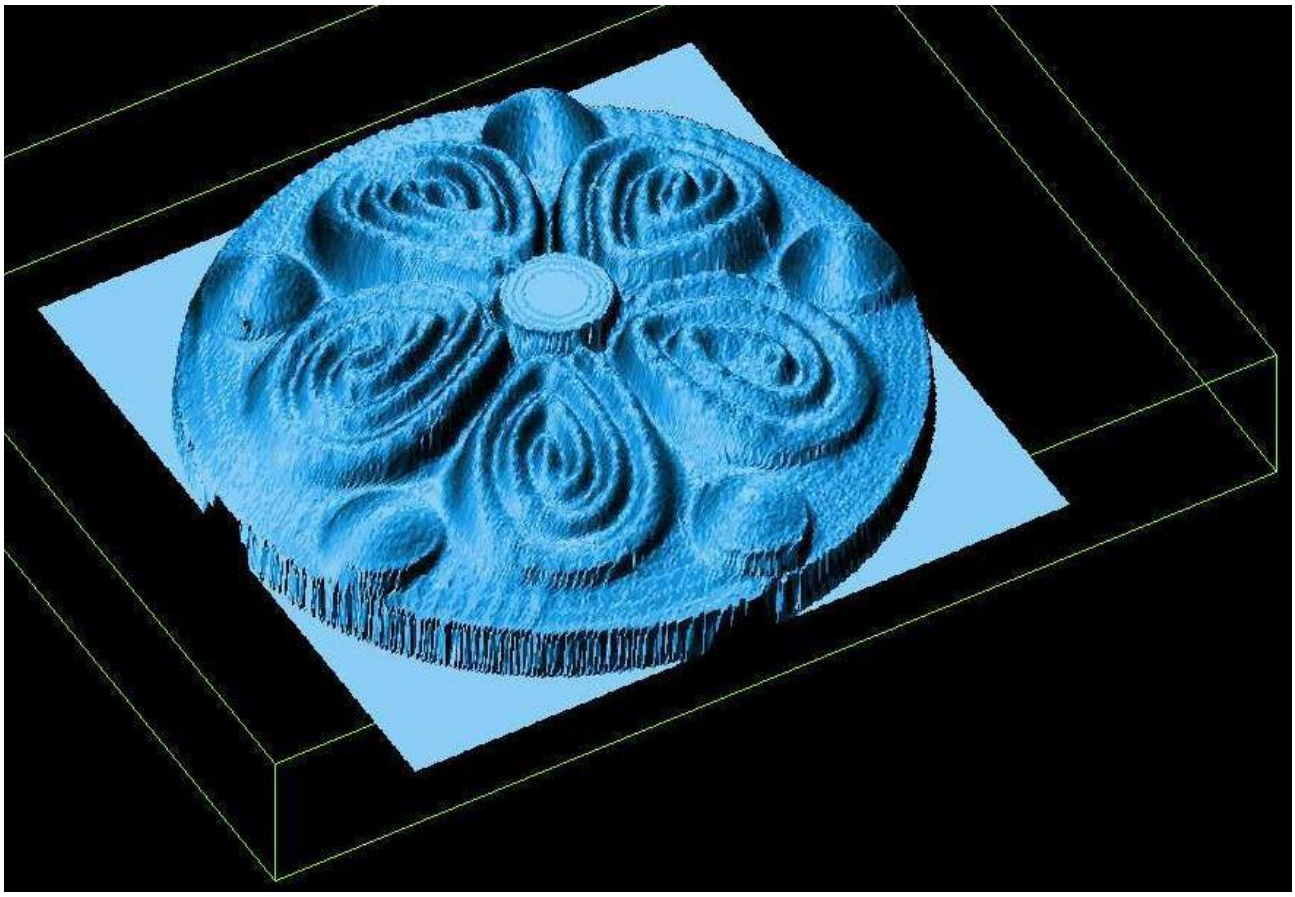

## 19.1. Standard and binocular sensors comparison

**Initial item**

**Standard sensor scanning ( without final filtration)**

**Binocular sensor scanning ( without final filtration)**